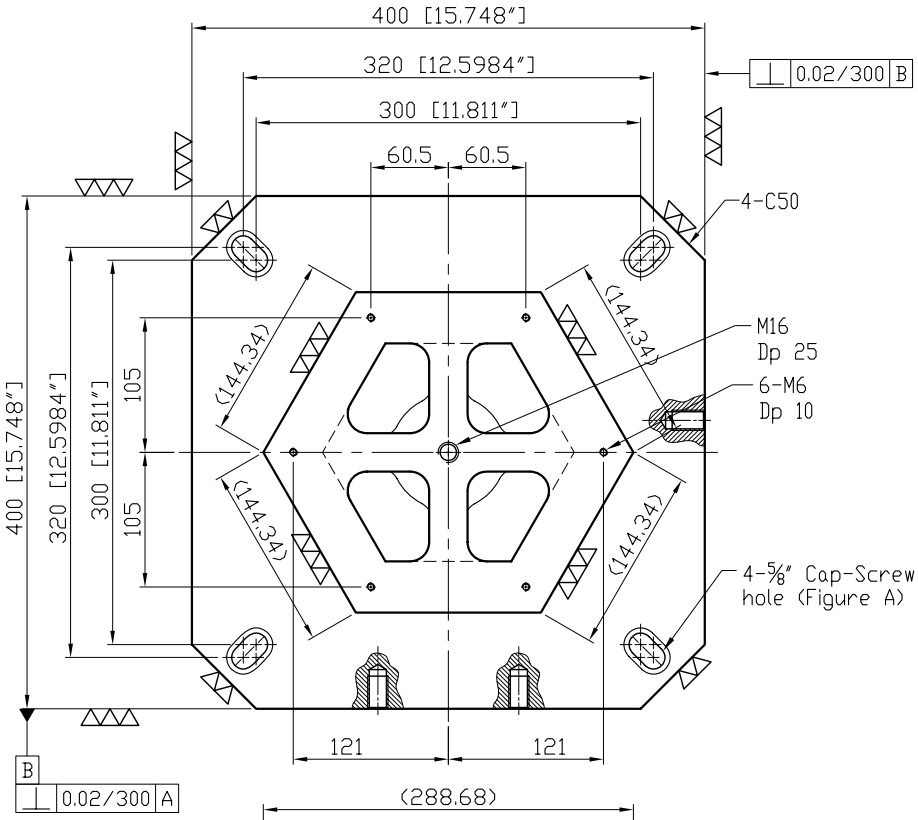

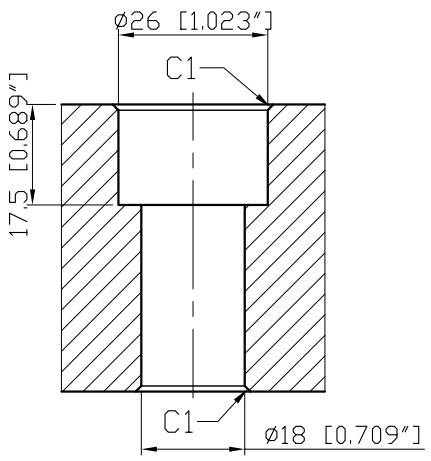

Figure A

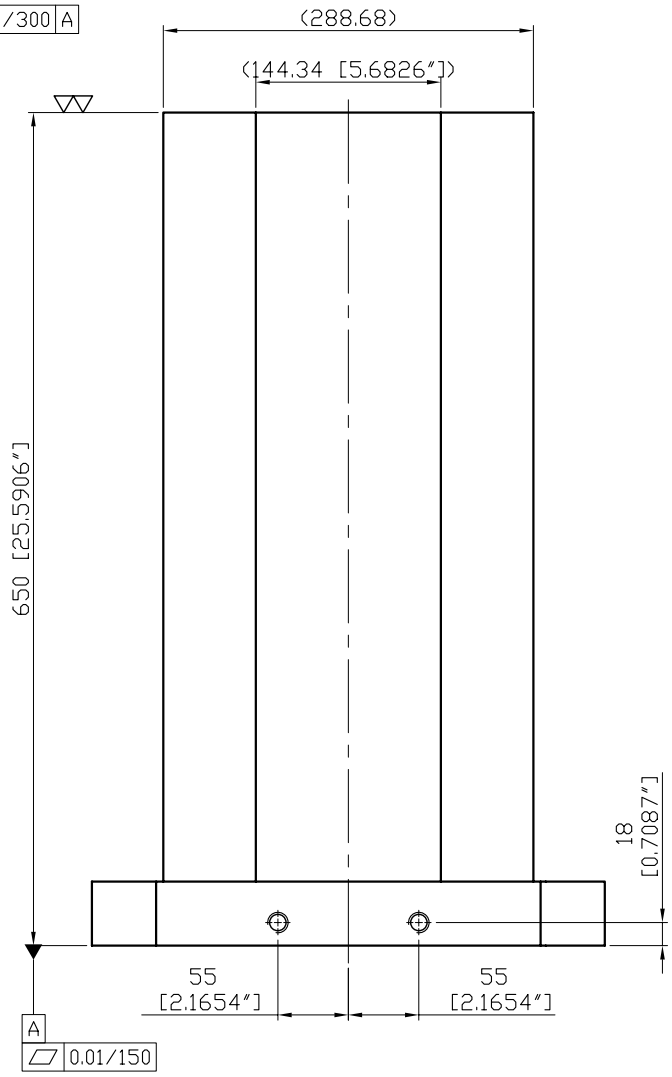

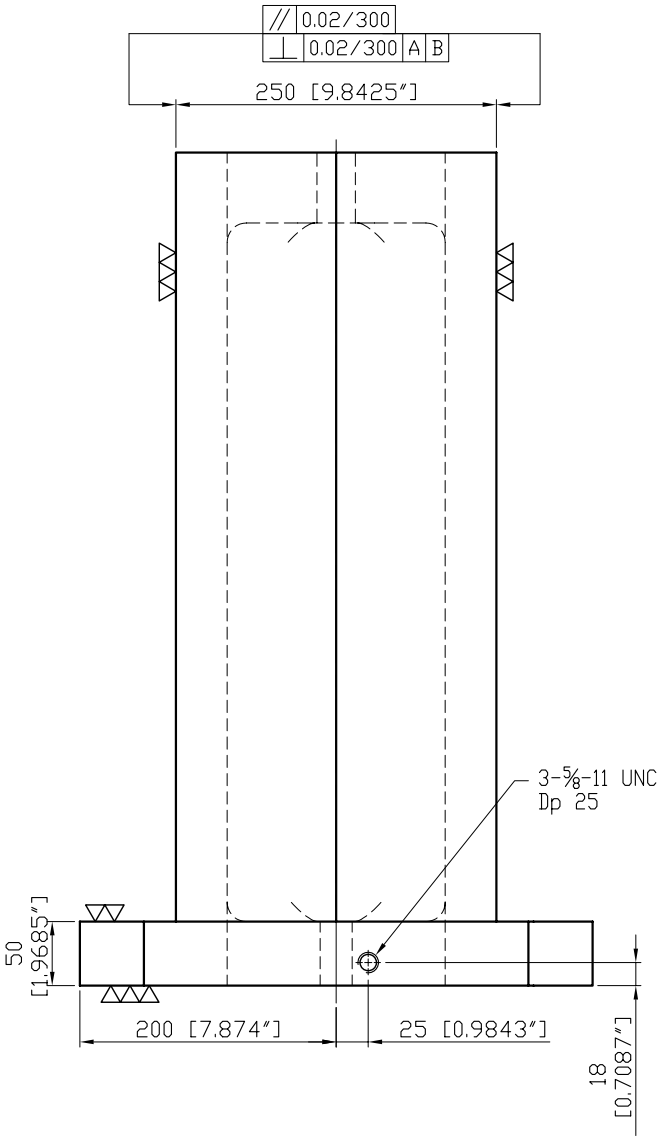

Material	Heat treatment	Surface treatment				
FC300 CAST IRON	Annealing Process					
Drafted by	Checked by	Approved by	Scale	Date	Sheet	Edition
S.C.H			1/1	2008.08.15	1/1	A
LEAVE INDUSTRIAL CO., LTD.			TITLE: HEXAGONAL CUBE			
			DWG.NO. 10-BP31-400400-0650			