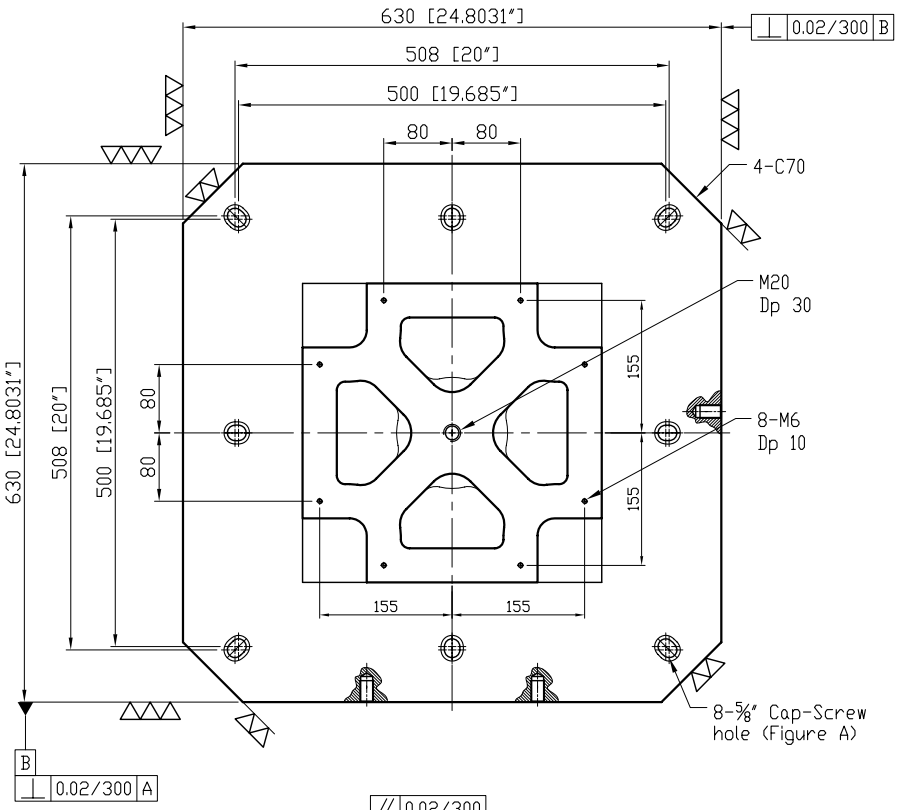

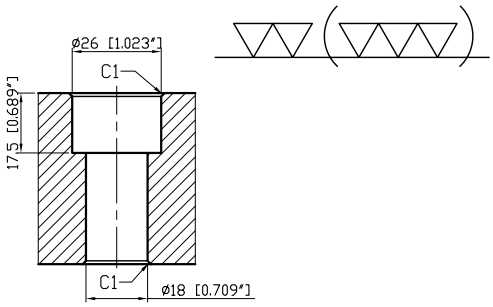

Figure A

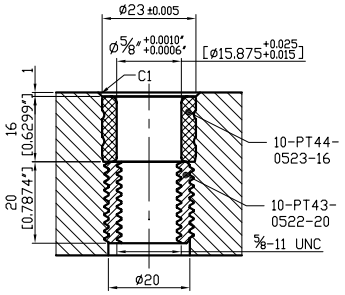

Figure B

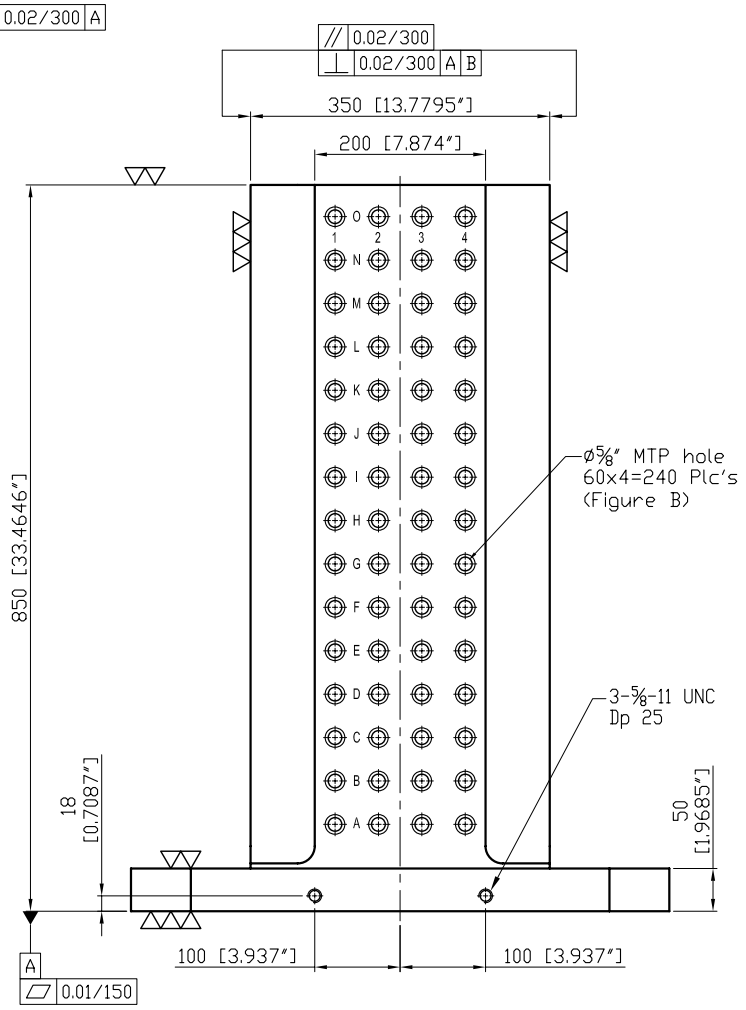

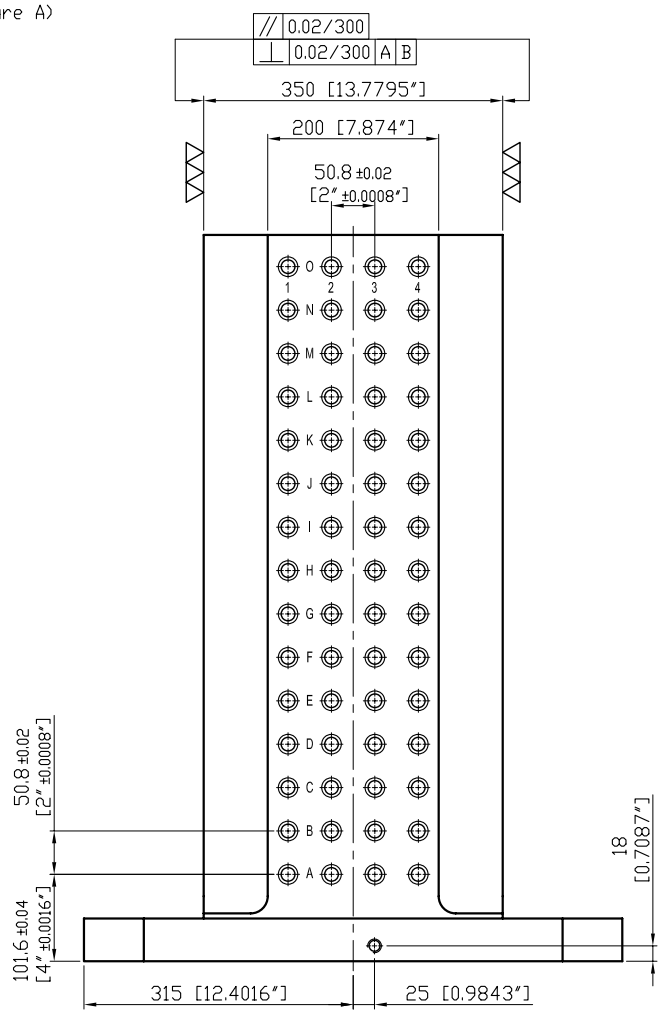

Material	Heat treatment	Surface treatment				
FC300 CAST IRON	Annealing Process					
Drafted by	Checked by	Approved by	Scale	Date	Sheet	Edition
S.C.H			1/1	2008.03.03	1/1	A

LEAVE INDUSTRIAL CO., LTD.

TITLE: CROSS TOOLING COLUMN

DWG.NO. 10-BP30-630630-0850-5