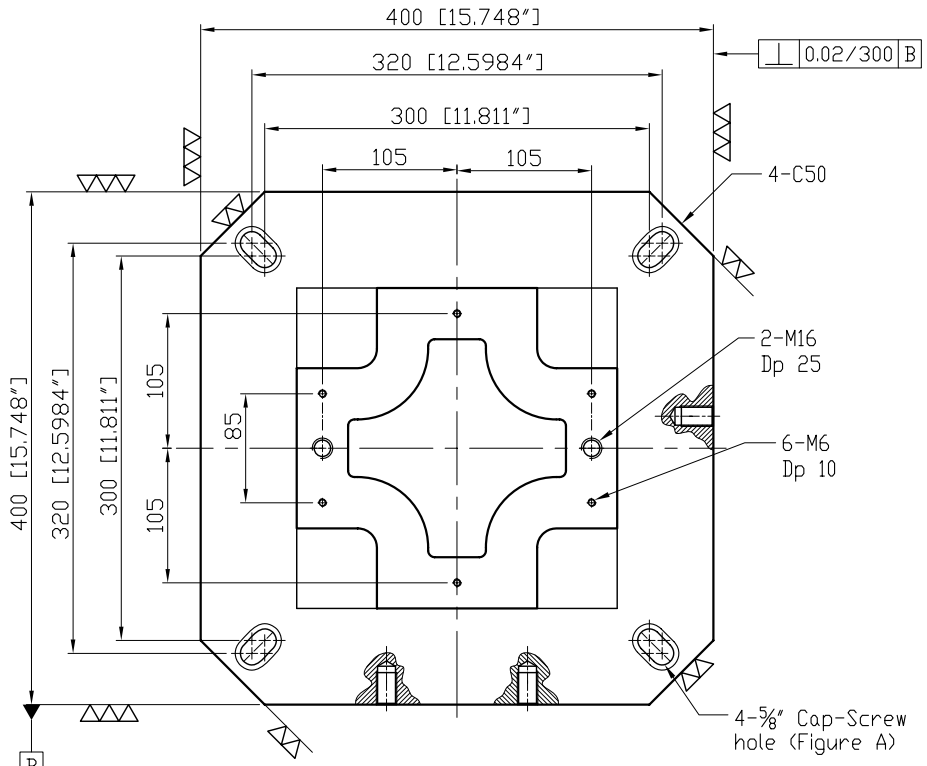

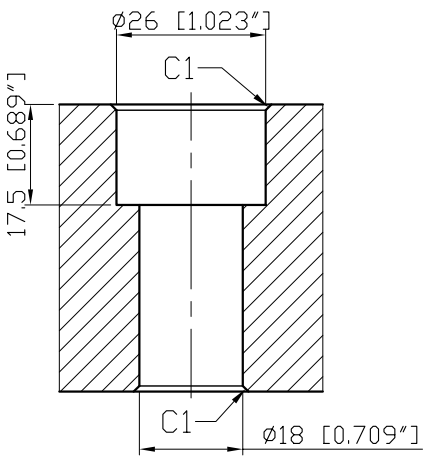

Figure A

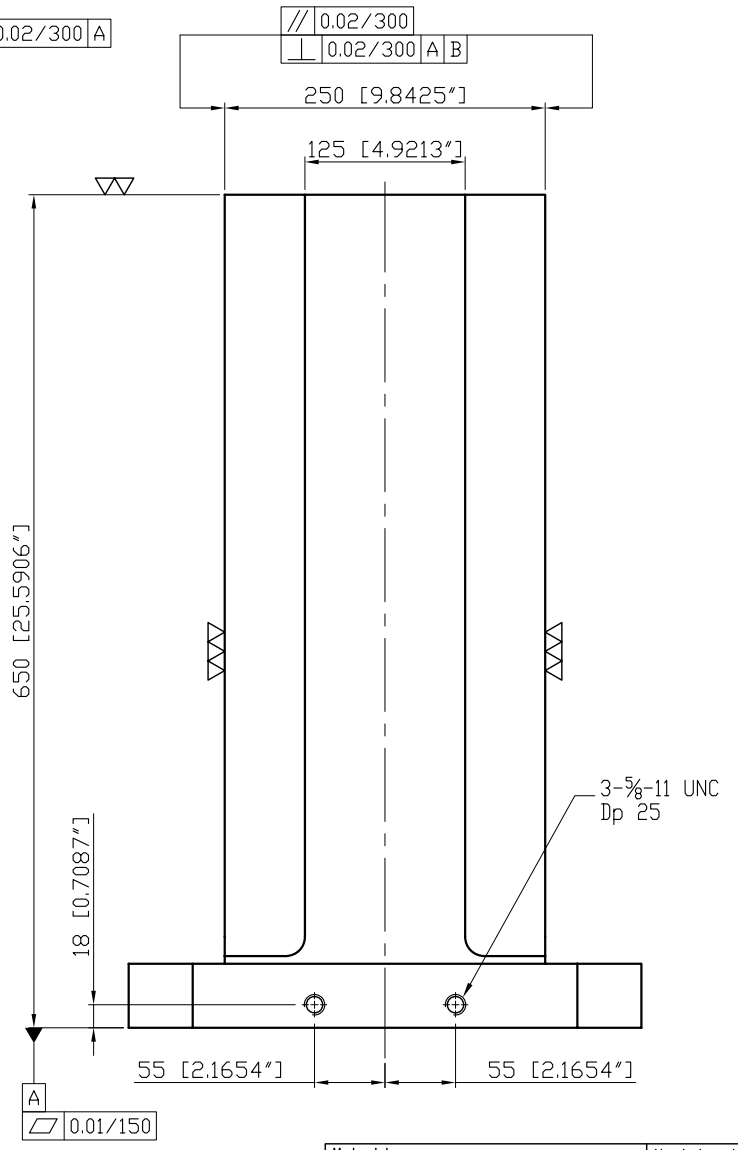

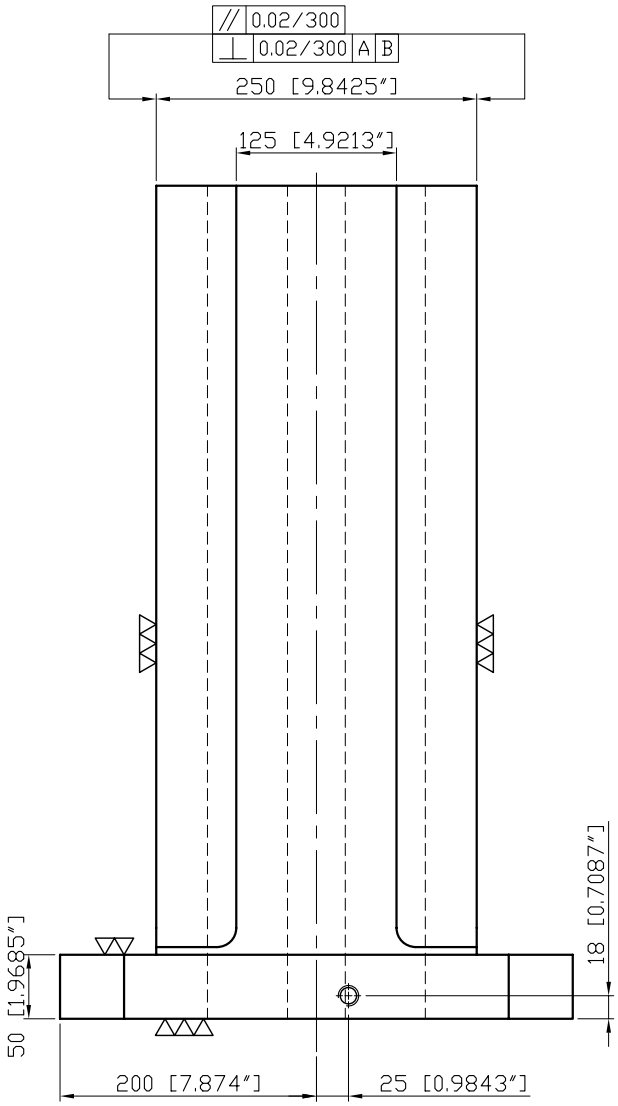

Material	Heat treatment	Surface treatment			
FC300 CAST IRON	Annealing Process				
Drafted by: S.C.H	Checked by	Approved by	Scale: 1/1	Date: 2008.03.03	Sheet: 1/1	Edition: A

LEAVE INDUSTRIAL CO., LTD.

TITLE: CROSS TOOLING COLUMN

DWG.NO. 10-BP29-400400-0650