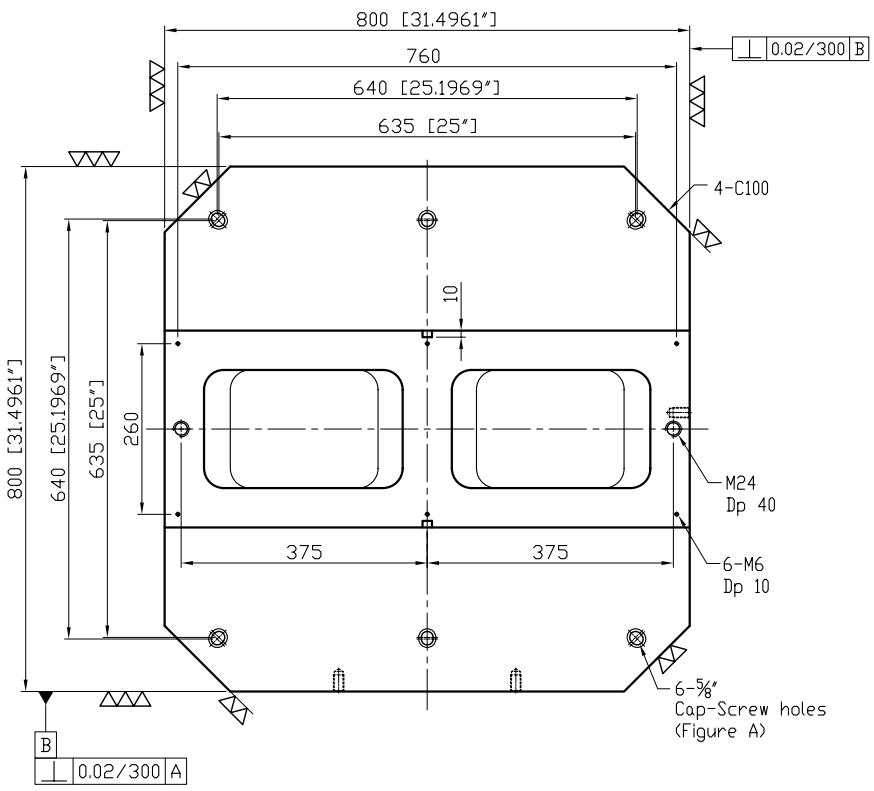

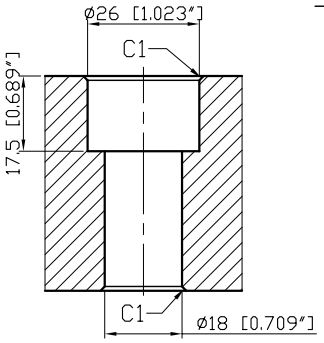

Figure A

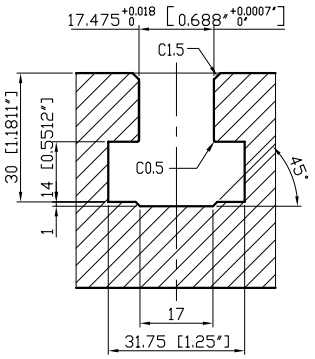

Figure D

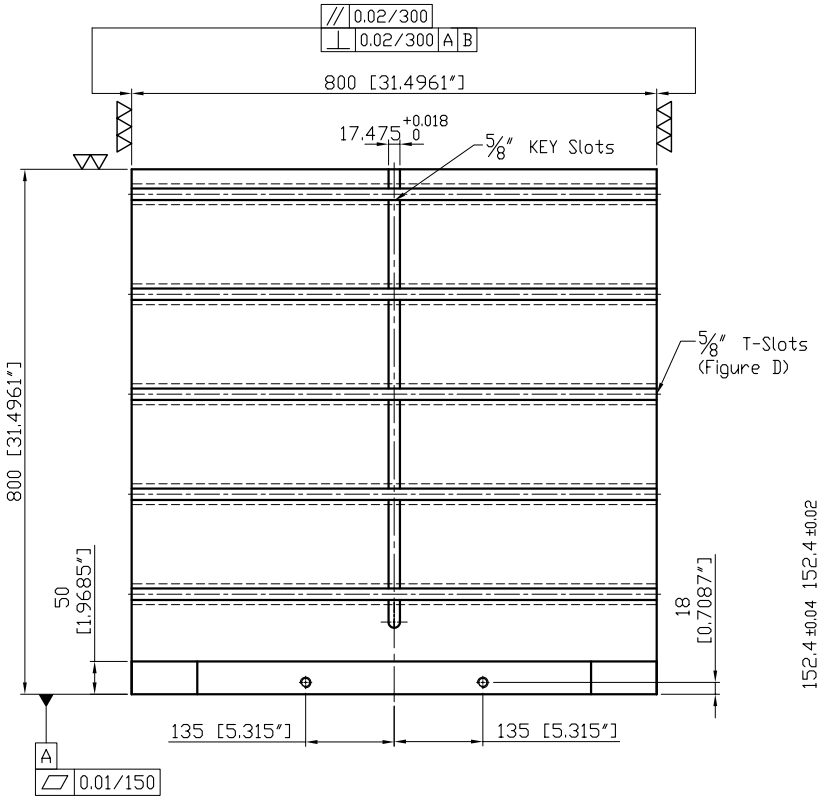

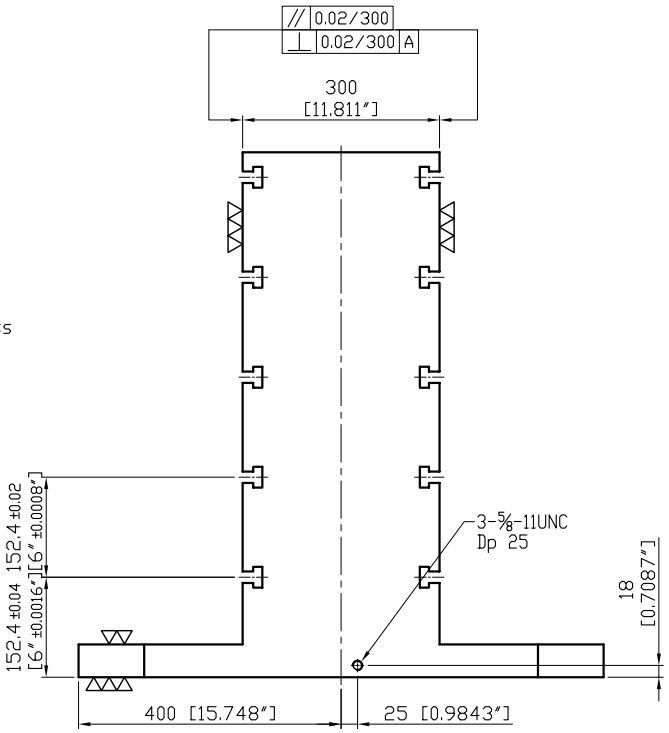

Material		Heat treatment		Surface treatment		
FC300 CAST IRON		Annealing Process				
Drafted by	Checked by	Approved by	Scale	Date	Sheet	Edition
S.C.H			1/1	2009.04.28	1/1	B
LEAVE INDUSTRIAL CO., LTD.			TITLE: DOUBLE SIDED TOOLING COLUMN			
			DWG.NO. 10-BP12-800800-0800-5			