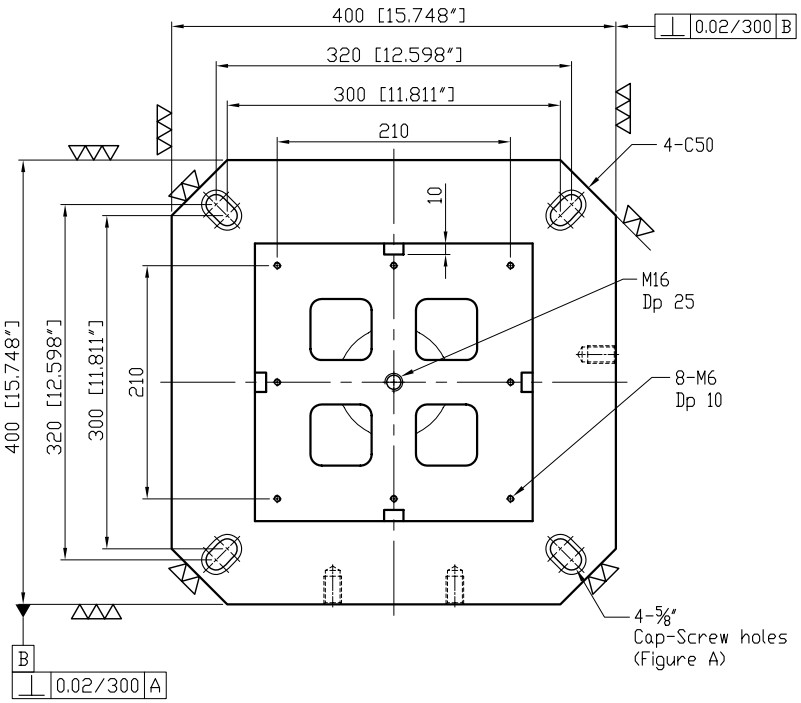

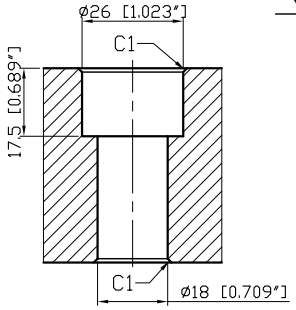

Figure A

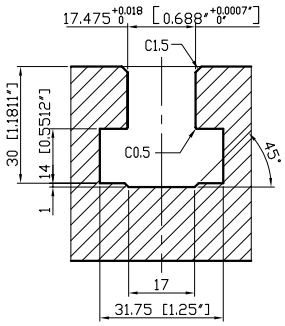

Figure D

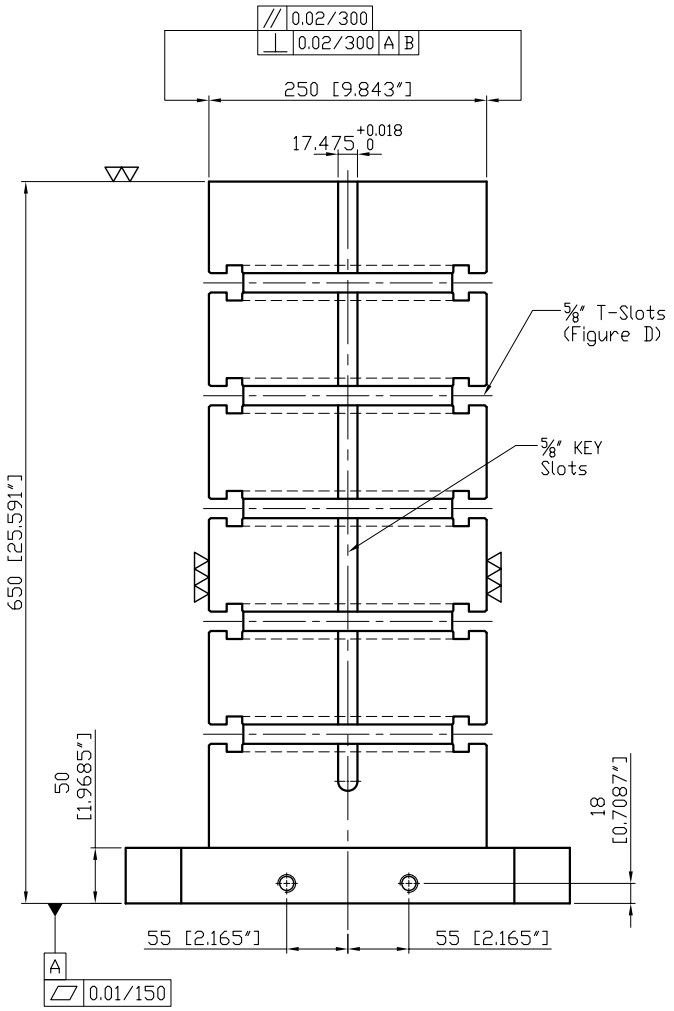

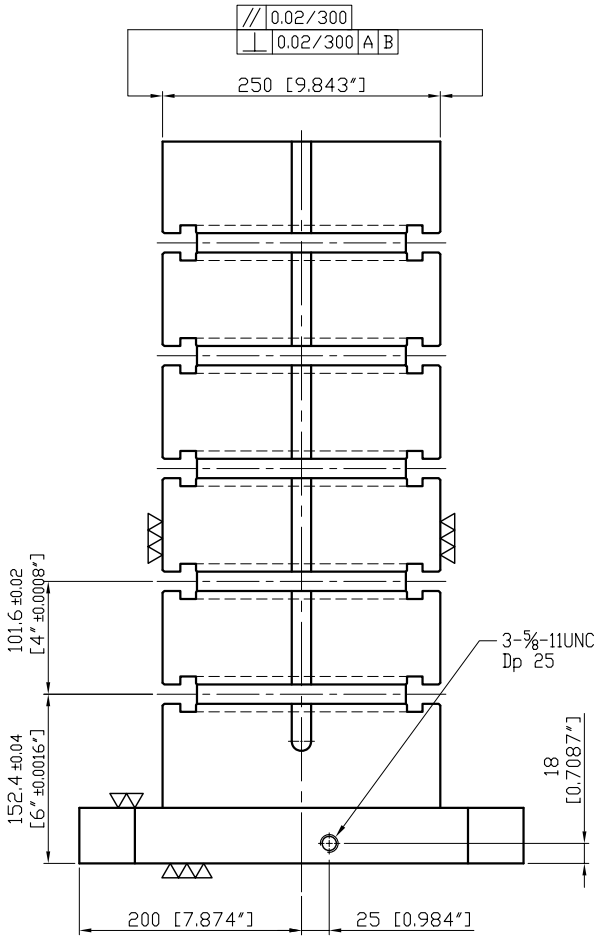

Material	Heat treatment	Surface treatment				
FC300 CAST IRON	Annealing Process					
Drafted by	Checked by	Approved by	Scale	Date	Sheet	Edition
S.C.H			1/1	2009.05.12	1/1	B

LEAVE INDUSTRIAL CO., LTD.

TITLE: SQUARE TOOLING COLUMN

DWG.NO. 10-BP09-400400-0650-5