# LEAVE INDUSTRIAL CO., LTD.
# TOMBSTONECITY

## MODULAR JIGS & FIXTURES
## MODULAR VISE SYSTEMS

### TOOLING & WORK HOLDING COMPONENTS

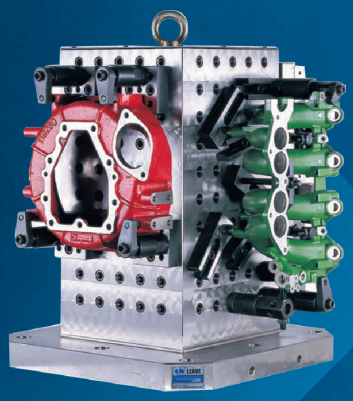

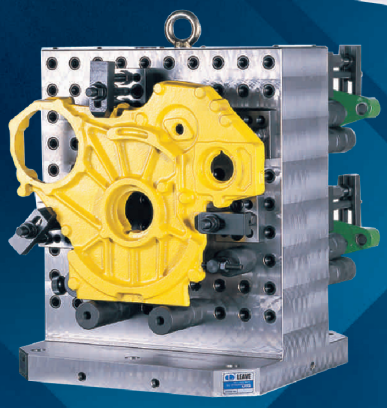

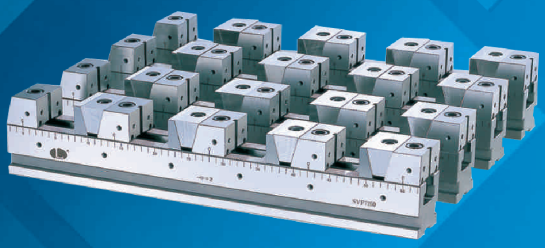

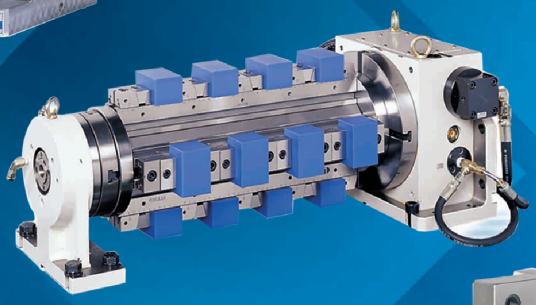

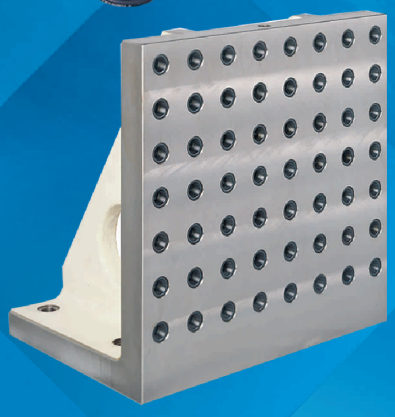

YASDA YBM 8T PRECISION CENTER

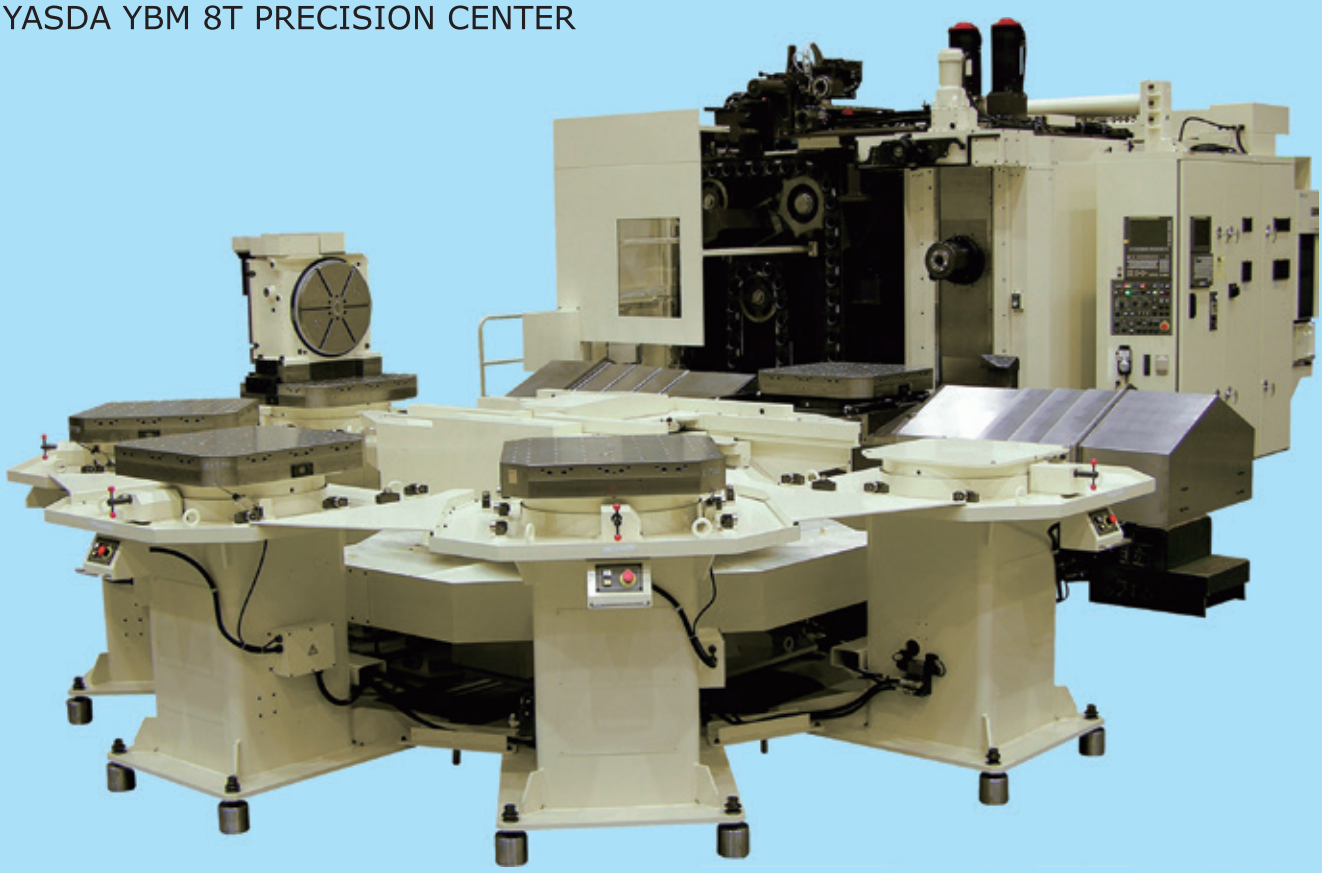

MAKINO A99E HMC

Production Area

Production Area

Large Capacity
Horizontal Machining Center

Q.C. Area

Production Area

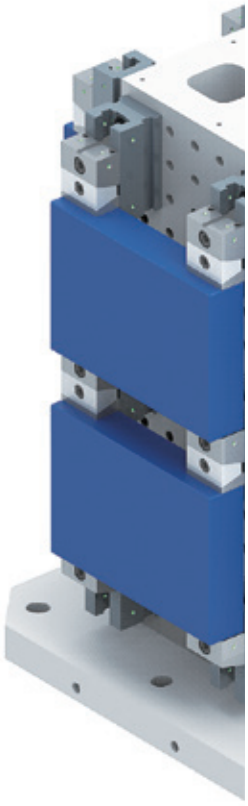

# BASE SERIES

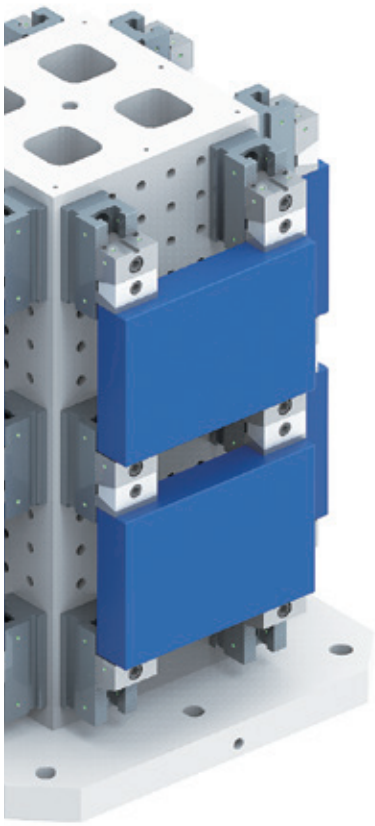

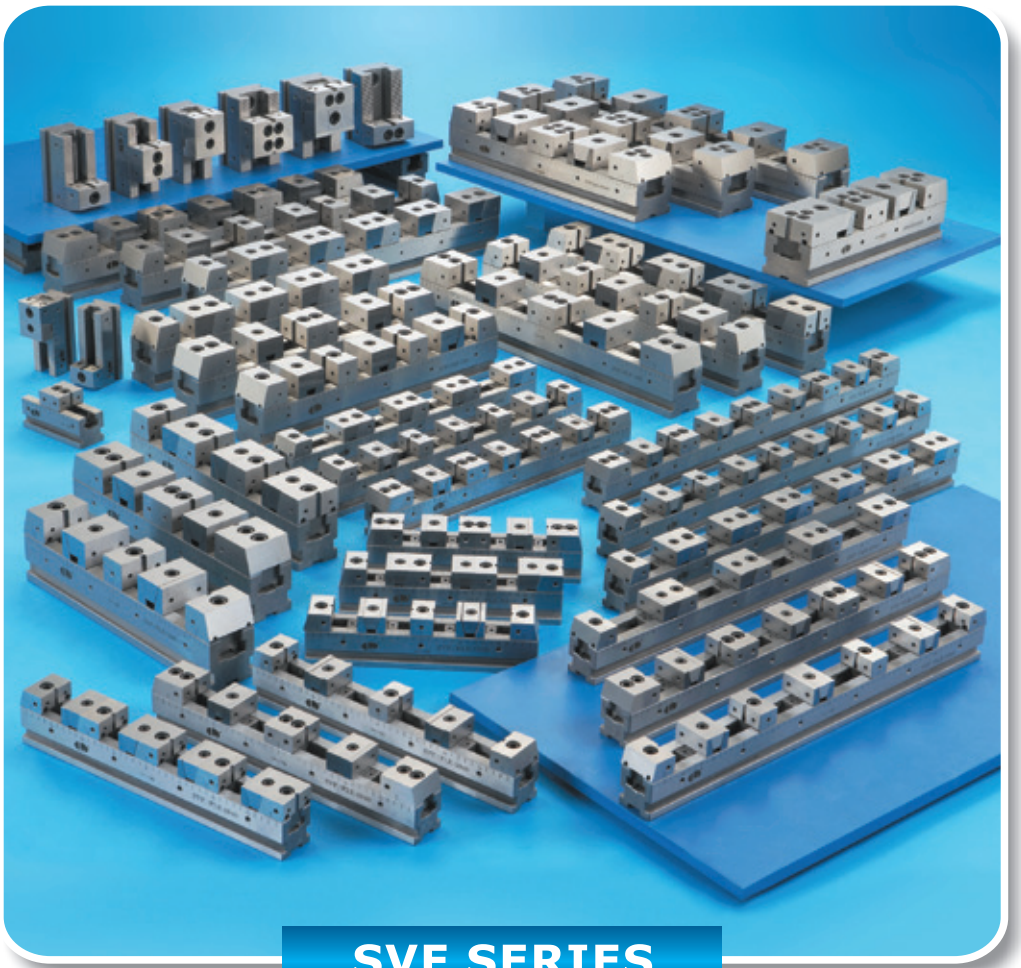

## SVF SERIES

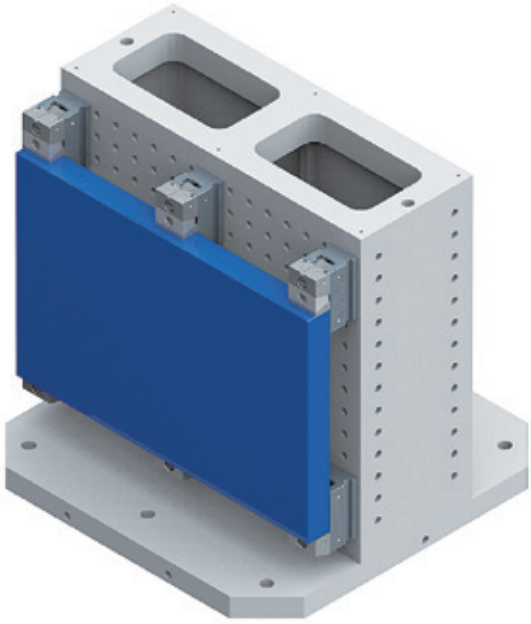

## SVF SERIES

# Various Holes and T-Slots Dimension on All "LEAVE" Fixtures "METRIC" Configuration

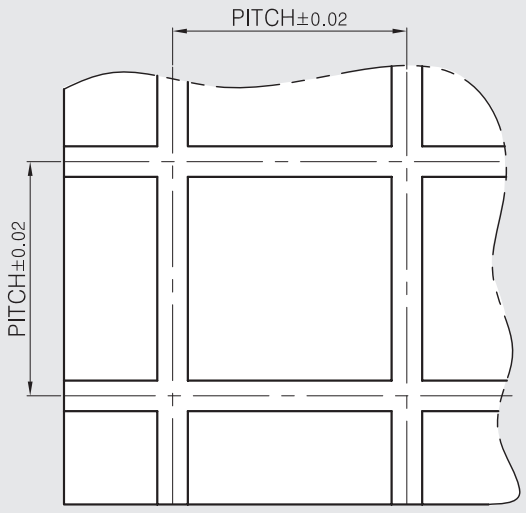


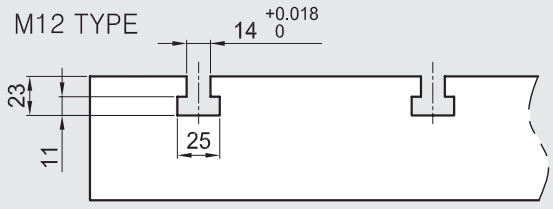


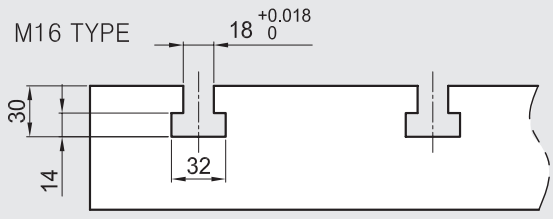


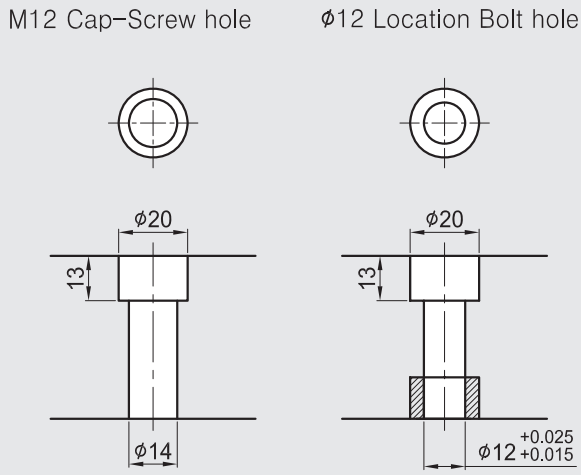


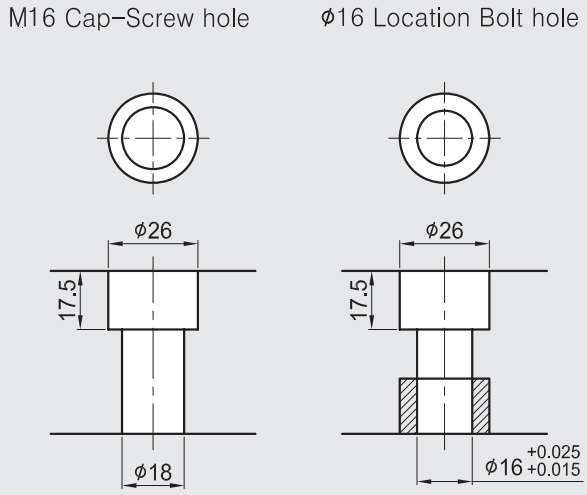


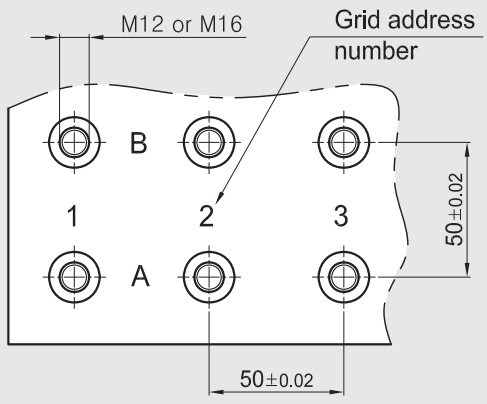


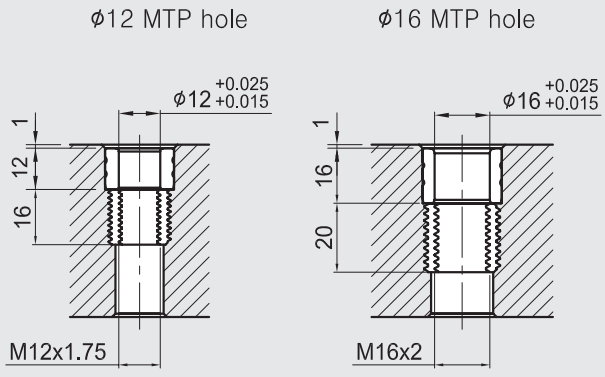

# Various Holes and T-Slots Dimension on All "LEAVE" Fixtures "INCH" Configuration

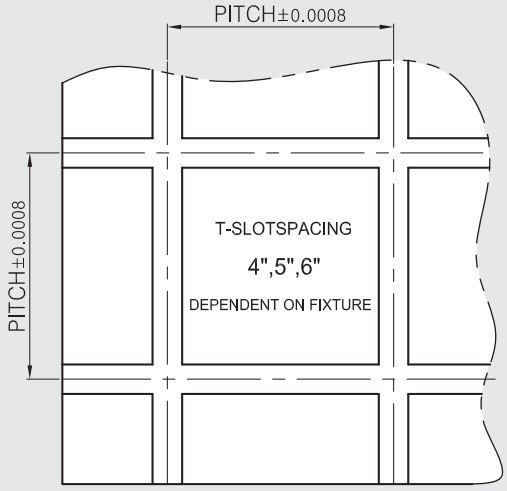


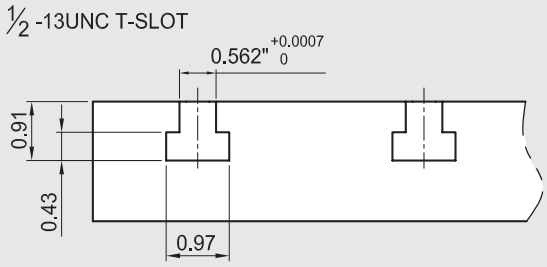


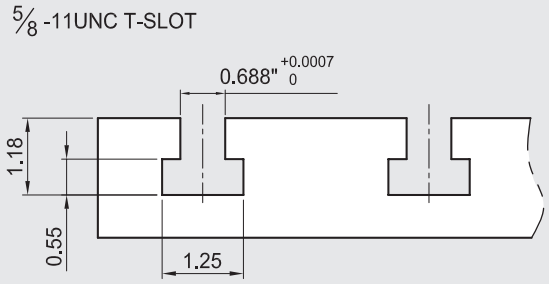


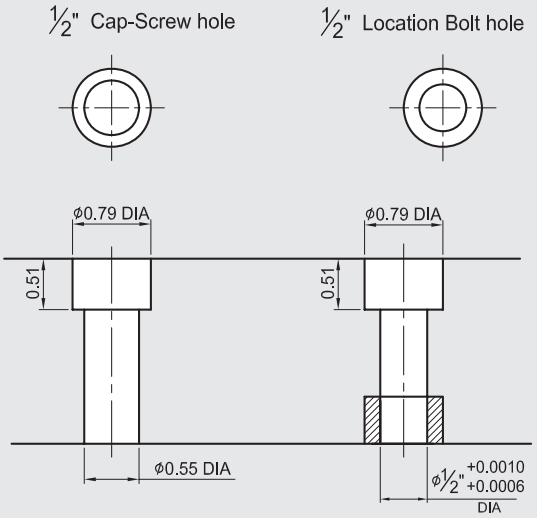


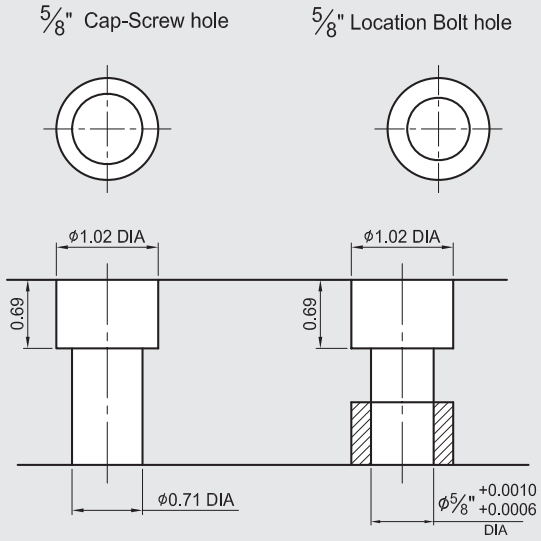


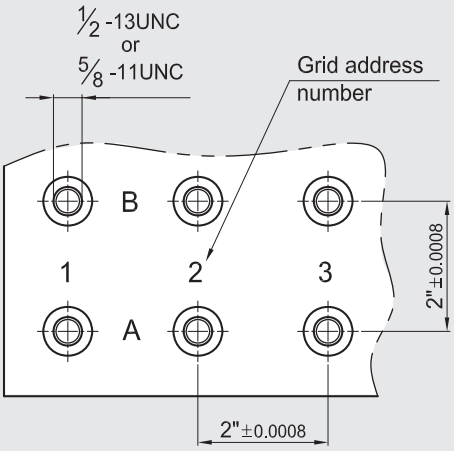


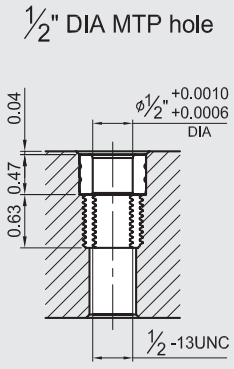


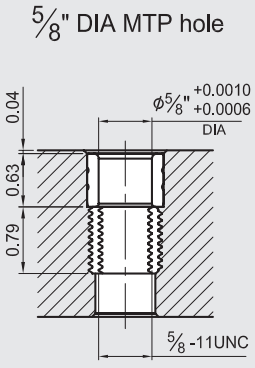

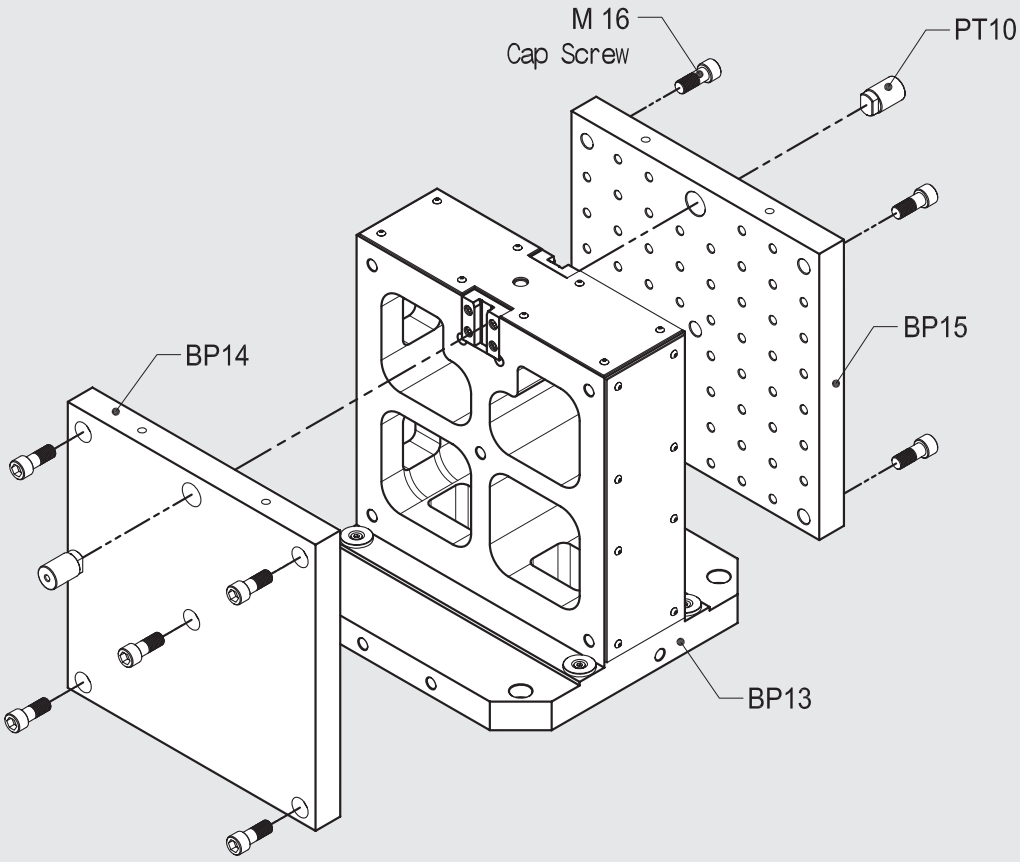
M 16
Cap Screw
PT10
BP15
BP14
BP13

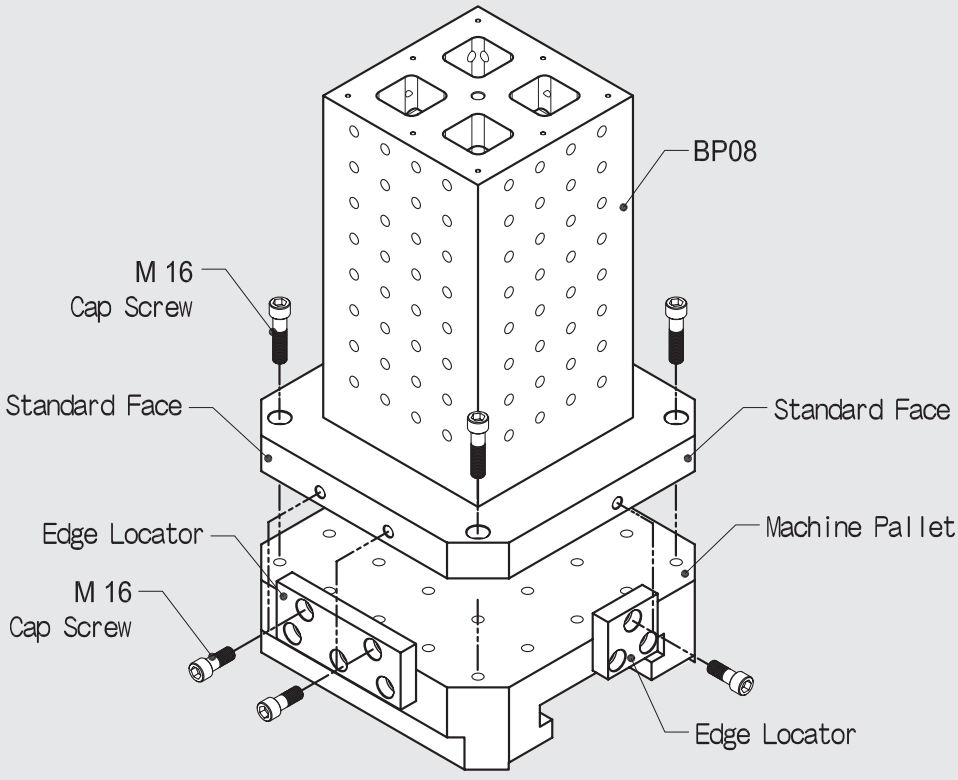
BP08
M 16
Cap Screw
Standard Face
Standard Face
Edge Locator
Machine Pallet
M 16
Cap Screw
Edge Locator

# TOMBSTONES, SUB PLATES, ANGLE PLATES

**BP01**
M/C
BASE PLATE
P.1-1

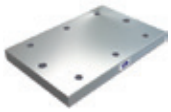

**BP02**
M/C
BASE PLATE
P.1-2

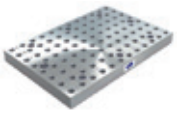

**BP03**
M/C
BASE PLATE
P.1-3

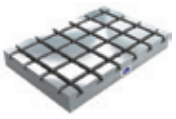

**BP04**
M/C
BASE PLATE
P.1-4

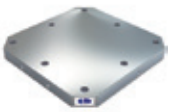

**BP05**
M/C
BASE PLATE
P.1-5

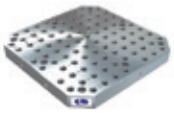

**BP06**
M/C
BASE PLATE
P.1-6

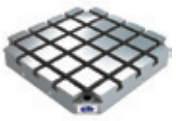

**BP07**
SQUARE TOOLING
COLUMN
P.1-7

**BP08**
SQUARE TOOLING
COLUMN
P.1-8

**BP09**
SQUARE TOOLING
COLUMN
P.1-9

**BP10**
DOUBLE SIDED
TOOLING COLUMN
P.1-10

**BP11**
DOUBLE SIDED
TOOLING COLUMN
P.1-11

**BP12**
DOUBLE SIDED
TOOLING COLUMN
P.1-12

**BP13**
MODULAR
TOOLING
COLUMN
P.1-13

**BP14**
SUB-PLATE
P.1-14

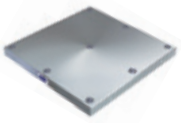

**BP15**
SUB-PLATE
P.1-15

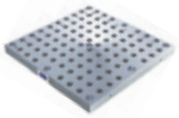

**BP16**
ROUND
BASE PLATE
P.1-16

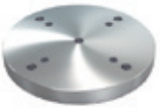

**BP17**
ROUND
BASE PLATE
P.1-17

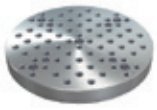

**BP18**
ROUND
BASE PLATE
P.1-18

**BP18H-30**
HAAS
RISER PLATE
P.1-19

**BP18H-36**
HAAS
RISER PLATE
P.1-19

**BP20**
M/C ANGLE
PLATE
P.1-20

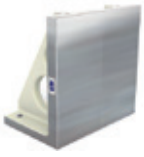

**BP21**
M/C ANGLE
PLATE
P.1-21

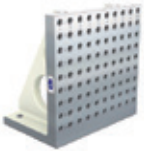

**BP22**
M/C ANGLE
PLATE
P.1-22

**BP22S-T**
STACKING
ANGLE PLATE
P.1-23

**BP22S-B**
STACKING
ANGLE PLATE
P.1-24

**BP23**
MC NARROW
ANGLE PLATE
P.1-25

**BP24**
MC NARROW
ANGLE PLATE
P.1-26

**BP25**
RECTANGULAR
CAST SECTION
P.1-27

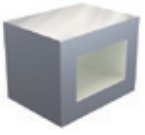

**BP26**
RECTANGULAR
CAST SECTION
P.1-28

**BP27**
RECTANGULAR
CAST SECTION
P.1-29

**BP28**
RECTANGULAR
CAST SECTION
P.1-30

**BP29**
CROSS TOOLING
COLUMN
P.1-31

**BP30**
CROSS TOOLING
COLUMN
P.1-32

**BP31**
HEXAGONAL
CUBE
P.1-33

**BP32**
HEXAGONAL
CUBE
P.1-34

**BP33**
OCTAGONAL
CUBE
P.1-35

**BP34**
OCTAGONAL
CUBE
P.1-36

**BP38**
5AXIS TOOLING
COLUMN
P.1-37

**BP39**
5AXIS TOOLING
COLUMN
P.1-38

**BP-SPECIAL**
SPECIAL
DESIGN
P.1-39
P.1-40

## CLAMP PARTS

INDEX


**CP11**
FREE JAW VISE
P.2-1

**CP23**
FREE VISE
P.2-1

## AUX PARTS

INDEX


**PT31**
SHOULDER BOLT
P.2-1

**PT34**
PROTECTION PLUG
P.2-2

**PT43**
THREADED INSERT
P.2-3

**PT44**
POSITIONING BUSHING
P.2-3

**PT60**
STEP DOWEL PIN
P.2-4

**PT61**
THREAD ADAPTER
P.2-4

## SVF MODULAR VISE SYSTEM

INDEX


**SVF-A**
FLEXIBLE LINE UP VISE SERIES
P.3-1
P.3-6

**SVF-B**
FLEXIBLE LINE UP VISE SERIES
P.3-2
P.3-8

**SVF-BE**
FLEXIBLE LINE UP VISE SERIES
P.3-3
P.3-10

**SVF-C**
FLEXIBLE LINE UP VISE SERIES
P.3-4
P.3-13

**SVF-CB**
M/C OCTAGONAL CUBE
P.3-20

**SVFX**
INDEXING TABLE
P.3-21
P.3-22

## OTHERS

INDEX


**NBK**
ROUND SUPER THIN CHUCK
P.5-1

**MCA**
SUPER THIN SQUARE CHUCKS
P.5-2

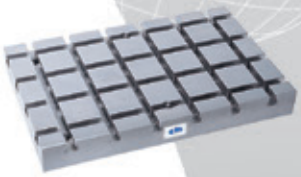

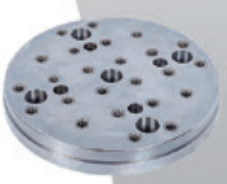

# TOMBSTONES, SUB PLATES, ANGLE PLATES

*BP01~BP34, BP-SPECIAL*

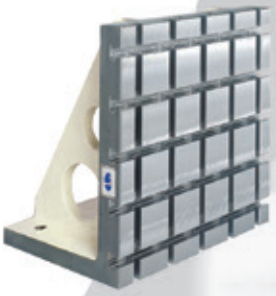

M/C BASE PLATE M/C CLAMPING CUBE M/C DOUBLE-SIDED ANGLE PLATE

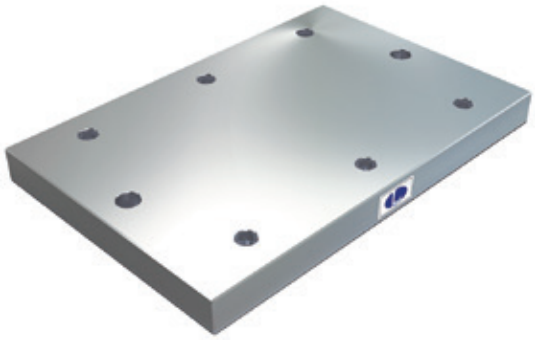

# BP01

## M/C BASE PLATE

- Material: Cast Iron FC300(JIS) / Class 45 Equivalent
- Heat treated (Normalized)
- Features: Ready to accept a hole pattern for your special jig.
- Surface ground Top & Bottom.
- Special design welcome.
  Up to 10'x32'

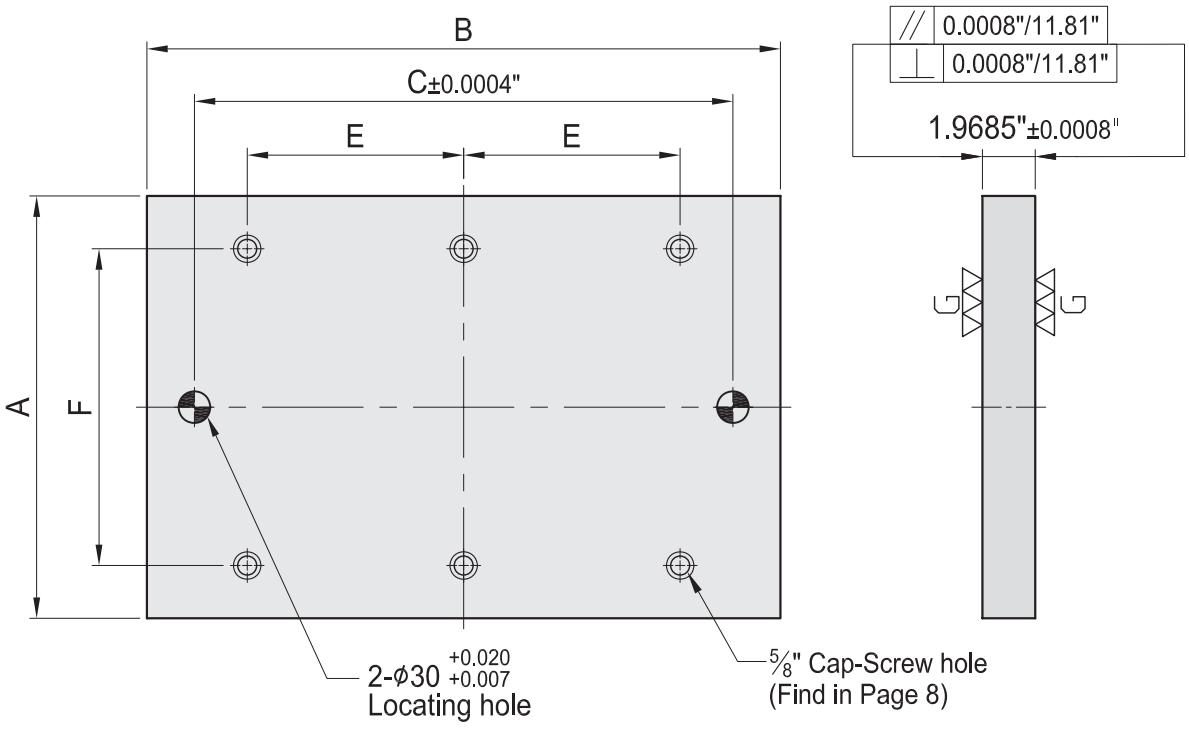


PLEASE NOTE THESE NUMBERS ARE ROUNDED. THIS CHART IS FOR REFERENCE ONLY.
PLEASE CONSULT CAD MODELS FOR EXACT DEMENSIONS AT WWW.TOMBSTONECITY.COM

| MODEL NO. | A" | B" | C" | E" | F" | lb |
|---|---|---|---|---|---|---|
| BP01-50400-0600 | 15.75 | 23.62 | 20 | As Required | | 178 |
| BP01-50500-0600 | 19.69 | | | | | 215 |
| BP01-50600-0600 | 23.62 | | | | | 257 |
| BP01-50400-0800 | 15.75 | 31.50 | 28 | As Required | | 229 |
| BP01-50450-0900 | 17.72 | 35.43 | 32 | | | 288 |
| BP01-50500-1000 | 19.69 | 39.37 | 36 | As Required | | 356 |
| BP01-50600-1200 | 23.62 | 47.24 | 44 | | | 518 |

*Easily configured to meet your special needs.

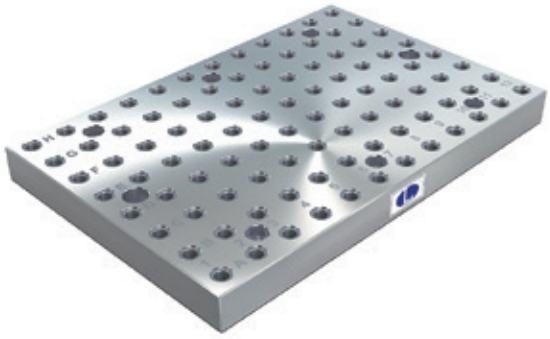

# BP02

## M/C BASE PLATE

- Material: Cast Iron FC300(JIS) / Class 45 Equivalent
- Heat treated (Normalized)
- Alignment Bushing: Steel Heat Treated HRC~60°
- Threaded Insert: Steel Heat Treated HRC~32°
- MTP hole spacing: 2"±0.0008"
- Features: Alignment bushing & thread insert at every hole location, easily adapts to standardized jig components.
- Surface ground Top & Bottom.
- Special design welcome.
  Up to 10'x32'
- X-Y Coordinates Engraved

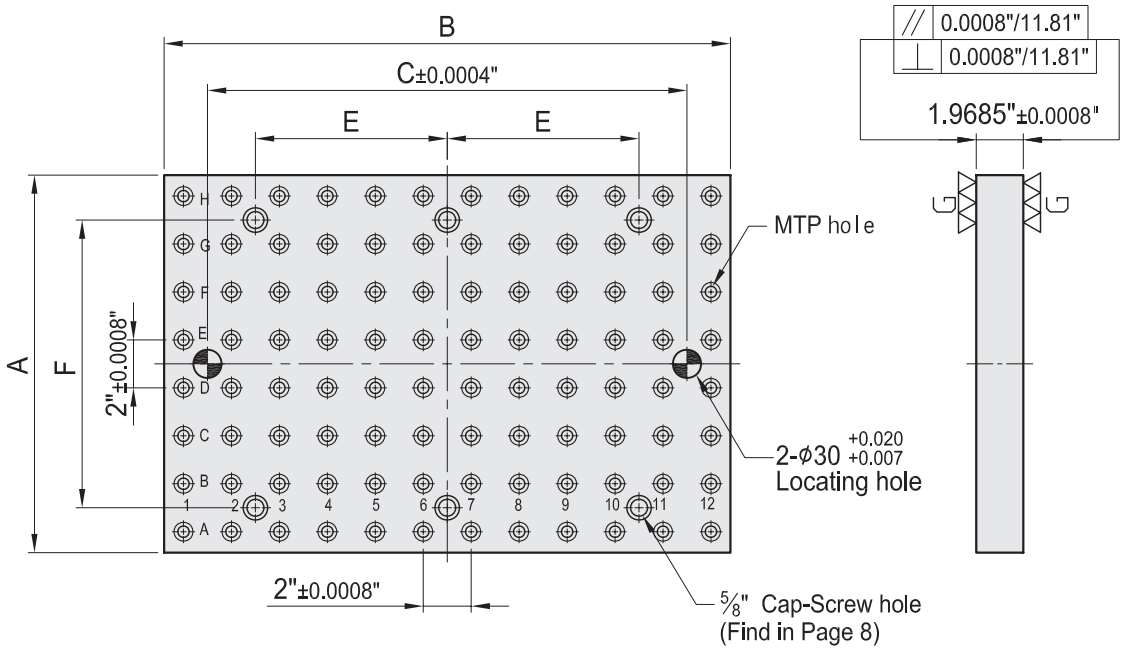


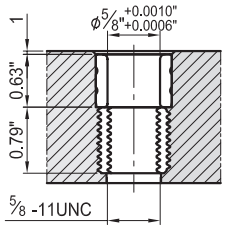


MTP hole

PLEASE NOTE THESE NUMBERS ARE ROUNDED. THIS CHART IS FOR REFERENCE ONLY.
PLEASE CONSULT CAD MODELS FOR EXACT DEMENSIONS AT WWW.TOMBSTONECITY.COM

| MODEL NO. | A" | B" | C" | E" | F" | MTP | lb |
|---|---|---|---|---|---|---|---|
| BP02-50400-0600-5 | 15.75 | 23.62 | 20 | As Required | | 96 | 196 |
| BP02-50500-0600-5 | 19.69 | | | | | 120 | 238 |
| BP02-50600-0600-5 | 23.62 | | | | | 144 | 265 |
| BP02-50400-0800-5 | 15.75 | 31.50 | 28 | As Required | | 128 | 238 |
| BP02-50450-0900-5 | 17.72 | 35.43 | 32 | | | 158 | 295 |
| BP02-50500-1000-5 | 19.69 | 39.37 | 36 | As Required | | 200 | 362 |
| BP02-50600-1200-5 | 23.62 | 47.24 | 44 | | | 288 | 529 |

*Easily configured to meet your special needs.
*Tombstones in stock have 5/8" mtp holes.Can be special ordered with 1/2" or metric mtp holes"

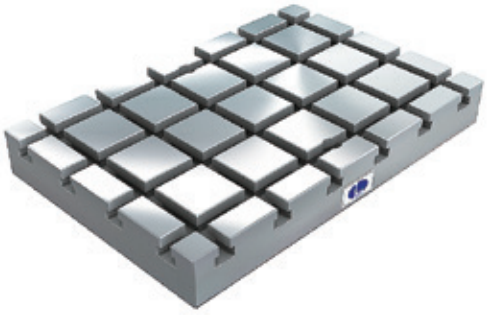

# BP03

## M/C BASE PLATE

- Material: Cast Iron FC300(JIS) / Class 45 Equivalent
- Heat treated (Normalized)
- Features: T-Slots running in 2 directions, easily adapts to standardized jig components.
- Surface ground Top & Bottom.
- Special design welcome.
  Up to 10'x32'

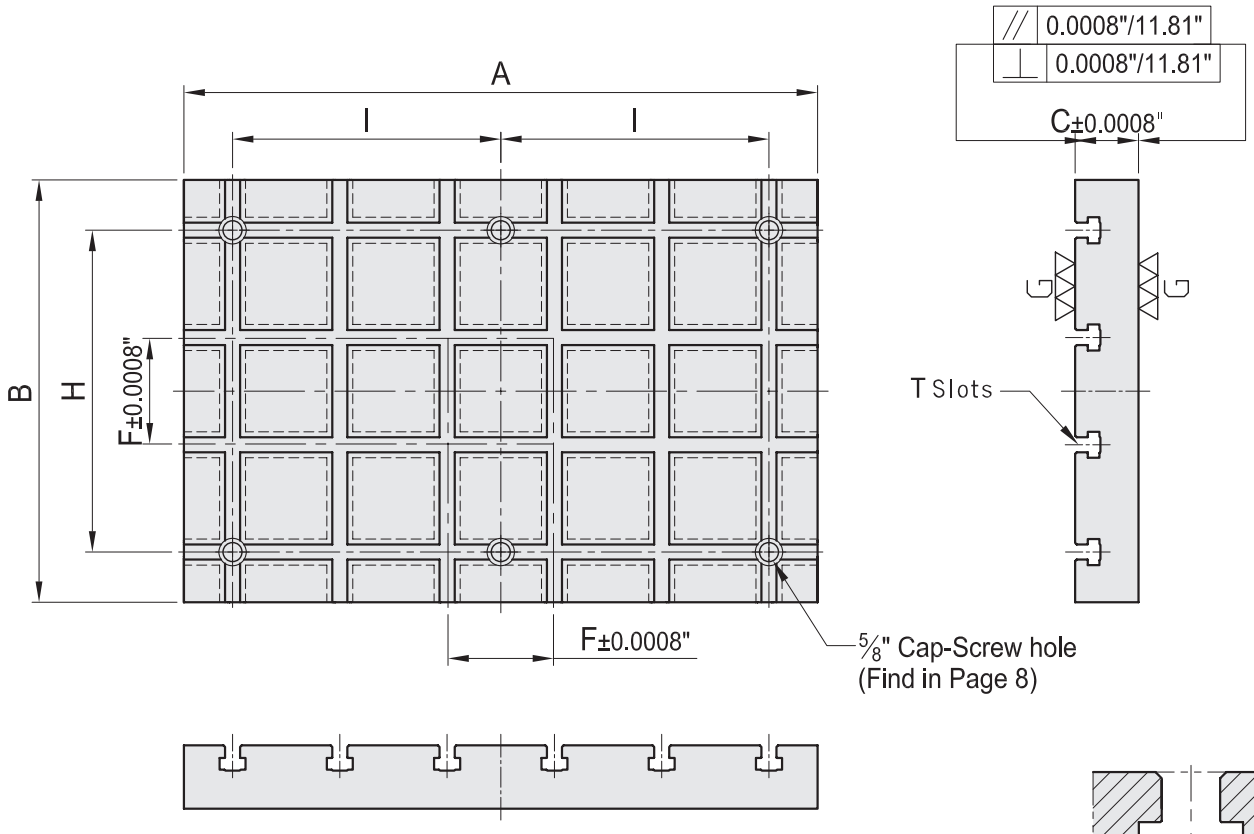


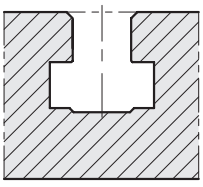

See Page 8 for
T Slot dimensions

PLEASE NOTE THESE NUMBERS ARE ROUNDED. THIS CHART IS FOR REFERENCE ONLY.
PLEASE CONSULT CAD MODELS FOR EXACT DEMENSIONS AT WWW.TOMBSTONECITY.COM

| MODEL NO. | A" | B" | C" | F" | H" | I" | lb |
|---|---|---|---|---|---|---|---|
| BP03-75400-0600-5 | 23.62 | 15.75 | 2.95 | 4 | As Required | | 260 |
| BP03-75500-0600-5 | 23.62 | 19.69 | 2.95 | 4 | As Required | | 324 |
| BP03-75600-0600-5 | 23.62 | 23.62 | 2.95 | 4 | As Required | | 381 |
| BP03-75400-0800-5 | 31.50 | 15.75 | 2.95 | 4 | As Required | | 333 |
| BP03-75450-0900-5 | 35.43 | 17.72 | 2.95 | 4 | As Required | | 401 |
| BP03-75500-1000-5 | 39.37 | 19.69 | 2.95 | 4 | As Required | | 503 |
| BP03-75600-1200-5 | 47.24 | 23.62 | 2.95 | 4 | As Required | | 725 |

*Easily configured to meet your special needs.
*Available with 1/2", 5/8" or MM T Slots.

# BP04

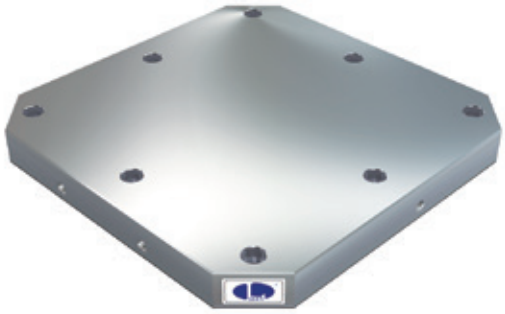

## M/C BASE PLATE

- Material: Cast Iron FC300(JIS) / Class 45 Equivalent
- Heat treated (Normalized)
- Application: Horizontal Machining Center.
- Features: Ready to accept a hole pattern for your special jig.
- Surface ground Top & Bottom.
- Special design welcome.
  Up to 10'x10'
- Base Plates are designed to fit both Inch & MM pallets.

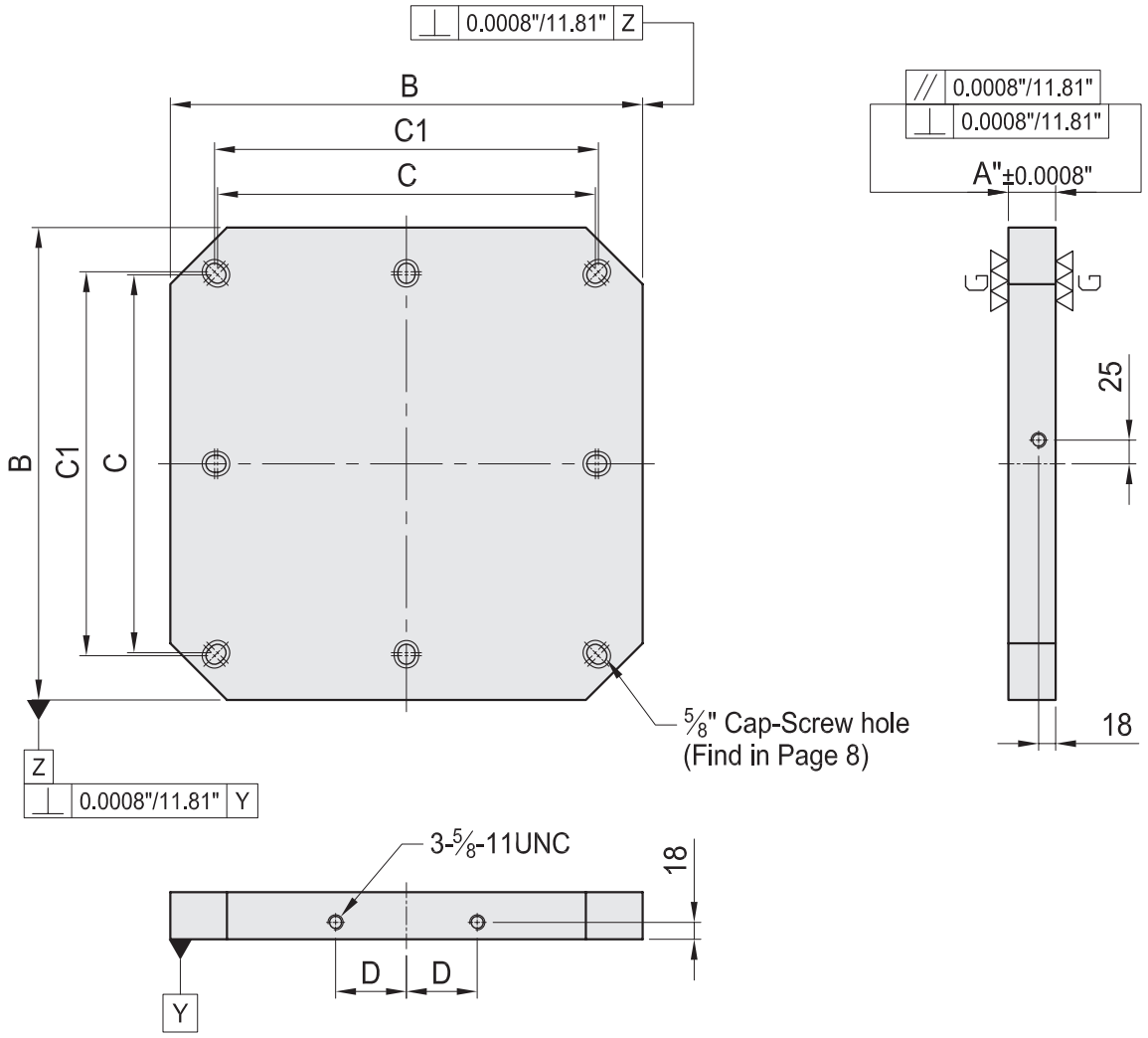


PLEASE NOTE THESE NUMBERS ARE ROUNDED. THIS CHART IS FOR REFERENCE ONLY.
PLEASE CONSULT CAD MODELS FOR EXACT DEMENSIONS AT WWW.TOMBSTONECITY.COM

| MODEL NO. | A" | B | | C | C1" | D | Mounting holes | lb |
|---|---|---|---|---|---|---|---|---|
| BP04-50400-0400 | 1.97 | 400 | 15.75" | 320 | 11.81 | 55 | 4 | 126 |
| BP04-50500-0500 | 1.97 | 500 | 19.69" | 400 | 16.00 | 75 | 8 | 194 |
| BP04-50630-0630 | 1.97 | 630 | 24.80" | 500 | 20.00 | 100 | 8 | 309 |
| BP04-50800-0800 | 1.97 | 800 | 31.50" | 630 | 25.00 | 135 | 8 | 496 |

*Easily configured to meet your special needs.

# BP05

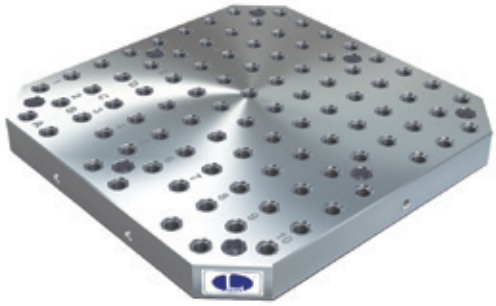

## M/C BASE PLATE

- Material: Cast Iron FC300(JIS) / Class 45 Equivalent
- Heat treated(Normalized)
- Alignment Bushing: Steel Heat Treated HRC~60°
- Threaded Insert: Steel Heat Treated HRC~32°
- MTP hole spacing: 2"±0.0008"
- Application: Horizontal Machining Center.
- Features: Alignment bushing & thread insert at every hole location, easily adapts to standardized jig components.
- Surface ground Top & Bottom.
- Special design welcome.
  Up to 10'x32'
- Base Plates are designed to fit both Inch & MM pallets.

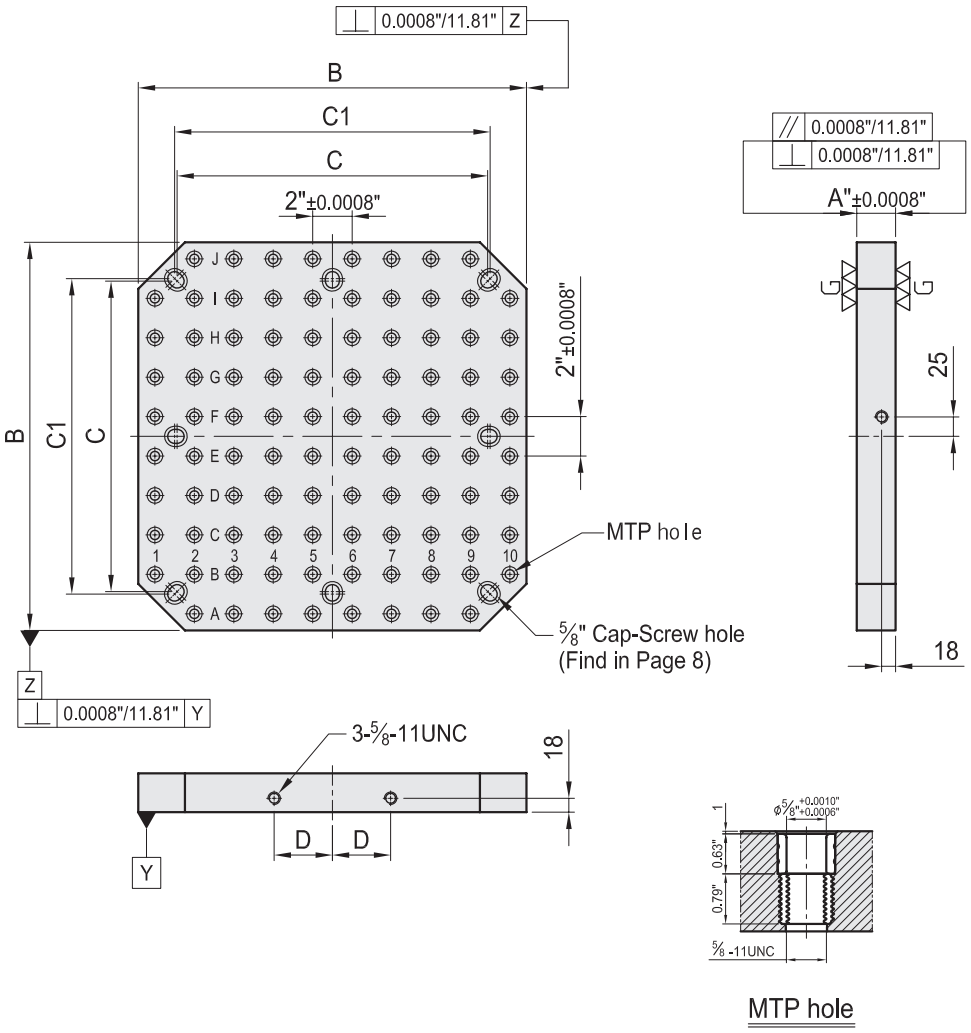


PLEASE NOTE THESE NUMBERS ARE ROUNDED. THIS CHART IS FOR REFERENCE ONLY.
PLEASE CONSULT CAD MODELS FOR EXACT DEMENSIONS AT WWW.TOMBSTONECITY.COM

| MODEL NO. | A" | B | | C | C1" | D | MTP | Mounting holes | lb |
|---|---|---|---|---|---|---|---|---|---|
| BP05-50400-0400-5 | 1.97 | 400 | 15.75" | 320 | 11.81 | 55 | 59 | 4 | 115 |
| BP05-50500-0500-5 | 1.97 | 500 | 19.69" | 400 | 16.00 | 75 | 93 | 8 | 176 |
| BP05-50630-0630-5 | 1.97 | 630 | 24.80" | 500 | 20.00 | 100 | 139 | 8 | 287 |
| BP05-50800-0800-5 | 1.97 | 800 | 31.50" | 640 | 25.00 | 135 | 229 | 8 | 450 |

*Easily configured to meet your special needs.
*Tombstones in stock have 5/8" mtp holes.Can be special ordered with 1/2" or metric mtp holes"

# BP06

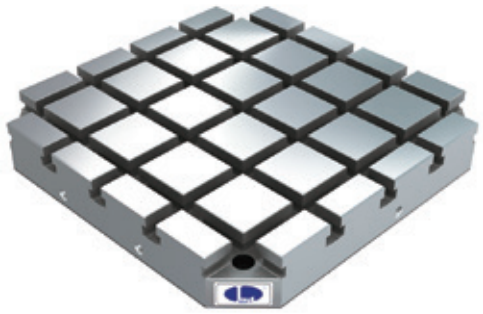

## M/C BASE PLATE

- Material: Cast Iron FC300(JIS) / Class 45 Equivalent
- Heat treated (Normalized)
- Application: Horizontal Machining Center.
- Features: T-Slots running in 2 directions, easily adapts to standardized jig components.
- Surface ground Top & Bottom.
- Special design welcome.
  Up to 10'x32'
- Base Plates are designed to fit both Inch & MM pallets.

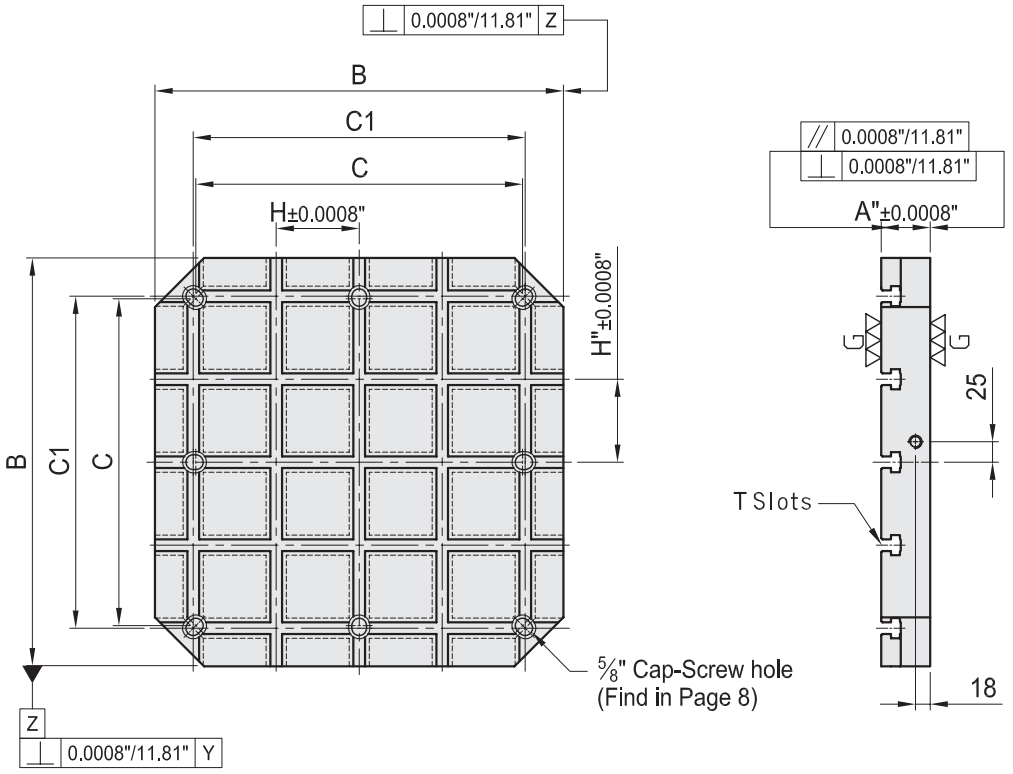


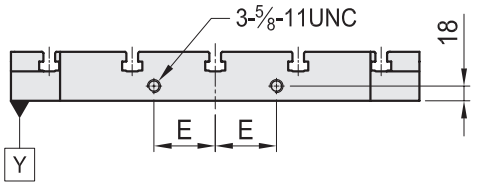


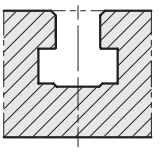

See Page 8 for
T Slot dimensions

PLEASE NOTE THESE NUMBERS ARE ROUNDED. THIS CHART IS FOR REFERENCE ONLY.
PLEASE CONSULT CAD MODELS FOR EXACT DEMENSIONS AT WWW.TOMBSTONECITY.COM

| MODEL NO. | A" | B | | C | C1" | E | H" | Mounting holes | lb |
|---|---|---|---|---|---|---|---|---|---|
| BP06-75400-0400-5 | 2.95 | 400 | 15.75" | 320 | 11.81 | 55 | 3 | 4 | 150 |
| BP06-75500-0500-5 | 2.95 | 500 | 19.69" | 400 | 16.00 | 75 | 4 | 8 | 238 |
| BP06-75630-0630-5 | 2.95 | 630 | 24.80" | 500 | 20.00 | 100 | 5 | 8 | 397 |
| BP06-75800-0800-5 | 2.95 | 800 | 31.50" | 640 | 25.00 | 135 | 6 | 8 | 650 |

*Easily configured to meet your special needs.
*Available with 1/2", 5/8" or MM T Slots.

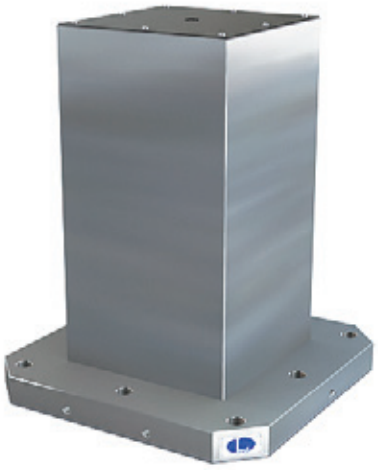

# BP07

## SQUARE TOOLING COLUMN

- Material: Cast Iron FC300(JIS) / Class 45 Equivalent
- Heat treated (Normalized)
- Application: Horizontal Machining Center.
- Features: Ready to accept a hole pattern for your special jig.
- Eye bolt & top cover included.
- Special design welcome.

**Tombstones are designed to fit both inch & MM pallets.**

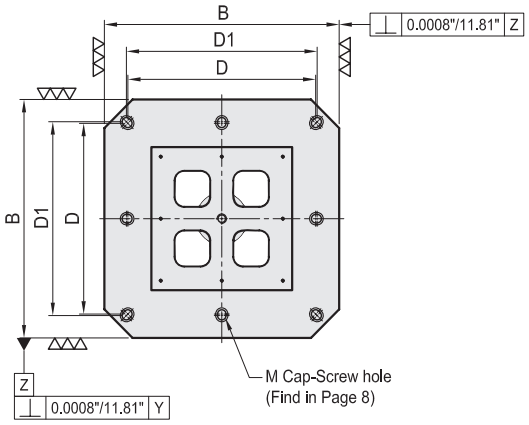


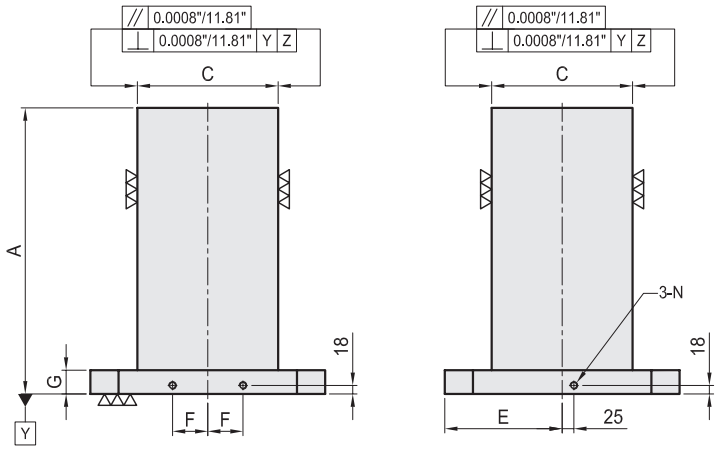


PLEASE NOTE THESE NUMBERS ARE ROUNDED. THIS CHART IS FOR REFERENCE ONLY.
PLEASE CONSULT CAD MODELS FOR EXACT DEMENSIONS AT WWW.TOMBSTONECITY.COM

| MODEL NO. | A" | B | | C" | D | D1" | E" | F | G" | M" | N" | Mounting holes | lb |
|---|---|---|---|---|---|---|---|---|---|---|---|---|---|
| BP07-300300-0500 | 19.69 | 300 | 11.81" | 5.91 | 250 | 10.00 | 5.91 | 40 | 1.97 | 1/2 | 1/2 | 4 | 198 |
| BP07-400400-0500 | 19.69 | 400 | 15.75" | 9.84 | 320 | 11.81 | 7.87 | 55 | 1.97 | 5/8 | 5/8 | 4 | 353 |
| BP07-400400-0650 | 25.59 | | | | | | | | | | | | 463 |
| BP07-400400-0822 | 22.00 | 400 | 15.75" | 8.00 | 320 | 11.81 | 7.87 | 55 | 1.97 | 5/8 | 5/8 | 4 | 342 |
| BP07-400400-0626 | 26.00 | | | 6.00 | | | | | | | | | |
| BP07-500500-0600 | 23.62 | 500 | 19.69" | 11.81 | 400 | 16.00 | 9.84 | 75 | 1.97 | 5/8 | 5/8 | 8 | 551 |
| BP07-500500-0750 | 29.53 | | | 11.81 | | | | | | | | | 684 |
| BP07-500500-0830 | 30.00 | | | 8.00 | | | | | | | | | 684 |
| BP07-630630-0700 | 27.56 | 630 | 24.80" | 13.78 | 500 | 20.00 | 12.40 | 100 | 1.97 | 5/8 | 5/8 | 8 | 882 |
| BP07-630630-0850 | 33.46 | | | | | | | | | | | | 1014 |
| BP07-630630-1830 | 30.00 | 630 | 24.80" | 18.00 | 500 | 20.00 | 12.40 | 100 | 1.97 | 5/8 | 5/8 | 8 | 1135 |
| BP07-800800-0800 | 31.50 | 800 | 31.50" | 19.69 | 640 | 25.00 | 15.75 | 135 | 1.97 | 5/8 | 5/8 | 8 | 1499 |
| BP07-800800-1000 | 39.37 | | | | | | | | | | | | 1764 |
| BP07-10001000-1000 | 39.37 | 1000 | 39.37" | 23.62 | – | – | 19.69 | – | 2.17 | 3/4 | 5/8 | 8 | 2567 |
| BP07-10001000-1250 | 49.21 | | | | | | | | | | | | 3067 |

*Easily configured to meet your special needs

# BP08

## SQUARE TOOLING COLUMN

- Material: Cast Iron FC300 (JIS) / Class 45 Equivalent
- Heat treated (Normalized)
- Alignment bushing: Steel Heat Treated HRC~60°
- Threaded Insert: Steel Heat Treated HRC~32°
- MTP hole spacing: 2"±0.0008"
- Application: Horizontal Machining Center.
- Features: Alignment bushing & thread insert at every hole location, easily adapts to standardized jig components.
- Eye bolt & top cover included.
- Special design welcome.

**Tombstones are designed to fit both inch & MM pallets.**

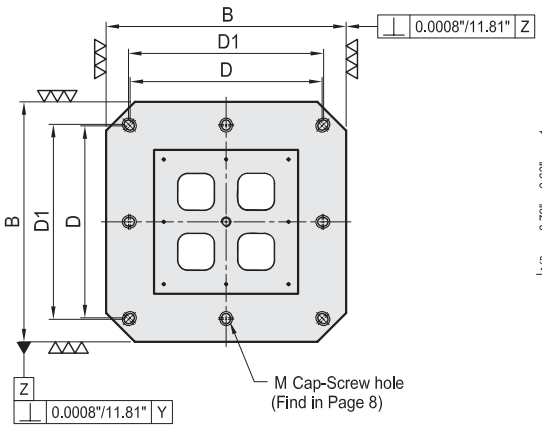


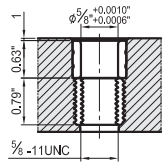


MTP hole

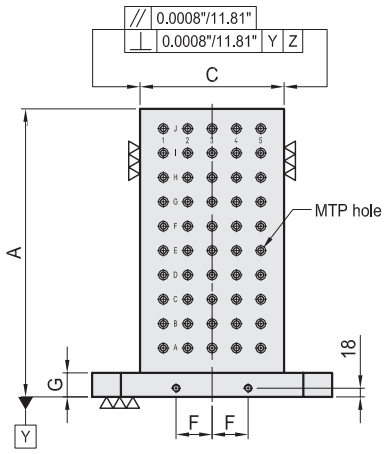


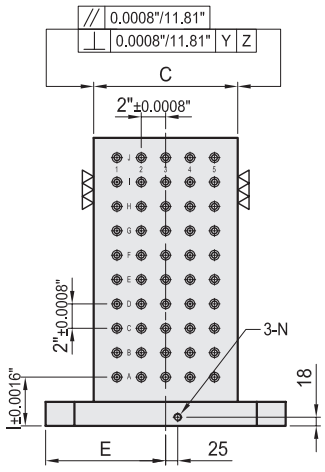


PLEASE NOTE THESE NUMBERS ARE ROUNDED. THIS CHART IS FOR REFERENCE ONLY.
PLEASE CONSULT CAD MODELS FOR EXACT DEMENSIONS AT WWW.TOMBSTONECITY.COM

| MODEL NO. | A" | B | | C" | D | D1" | E" | F | G" | M" | N" | I" | MTP | Mounting holes | lb |
|---|---|---|---|---|---|---|---|---|---|---|---|---|---|---|---|
| BP08-400400-0500-5 | 19.69 | 400 | 15.75" | 9.84 | 320 | 11.81 | 7.87 | 55 | 1.97 | 5/8 | 5/8 | 4 | 128 | 4 | 335 |
| BP08-400400-0650-5 | 25.59 | | | | | | | | | | | | 176 | | 430 |
| BP08-400400-0626-5 | 26.00 | | | 6.00 | | | | | | | | | 176 | | 430 |
| BP08-500500-0600-5 | 23.62 | 500 | 19.69" | 11.81 | 400 | 16.00 | 9.84 | 75 | 1.97 | 5/8 | 5/8 | 4 | 200 | 8 | 518 |
| BP08-500500-0750-5 | 29.53 | | | | | | | | | | | | 260 | | 650 |
| BP08-500500-0830-5 | 30.00 | | | 8.00 | | | | | | | | | 260 | | 650 |
| BP08-630630-0700-5 | 27.56 | 630 | 24.80" | 13.78 | 500 | 20.00 | 12.40 | 100 | 1.97 | 5/8 | 5/8 | 4 | 288 | 8 | 805 |
| BP08-630630-0850-5 | 33.46 | | | | | | | | | | | | 360 | | 970 |
| BP08-800800-0800-5 | 31.50 | 800 | 31.50" | 19.69 | 640 | 25.00 | 15.75 | 135 | 1.97 | 5/8 | 5/8 | 5 | 468 | 8 | 1389 |
| BP08-800800-1000-5 | 39.37 | | | | | | | | | | | | 612 | | 1698 |
| BP08-10001000-1000-5 | 39.37 | 1000 | 39.37" | 23.62 | – | – | 19.69 | – | 2.17 | 3/4 | 5/8 | 5 | 792 | 8 | 2567 |
| BP08-10001000-1250-5 | 49.21 | | | | | | | | | | | | 1012 | | 3067 |

*Easily configured to meet your special needs.
*Tombstones in stock have 5/8" mtp holes.Can be special ordered with 1/2" or metric mtp holes"

# BP09

## SQUARE TOOLING COLUMN

- Material: Cast Iron FC300(JIS) / Class 45 Equivalent
- Heat treated (Normalized)
- Features: T-Slots running horizontally, key-way running vertically, easily adapts to standardized jig components.
- Eye bolt & top cover included.
- Special design welcome.

**Tombstones are designed to fit both inch & MM pallets.**

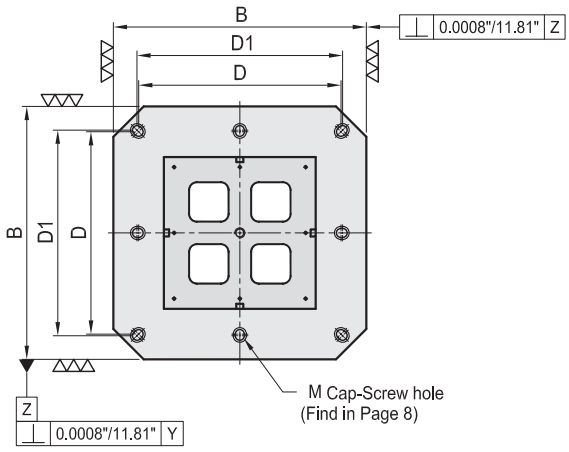


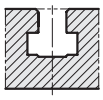

See Page 8 for
T Slot dimensions

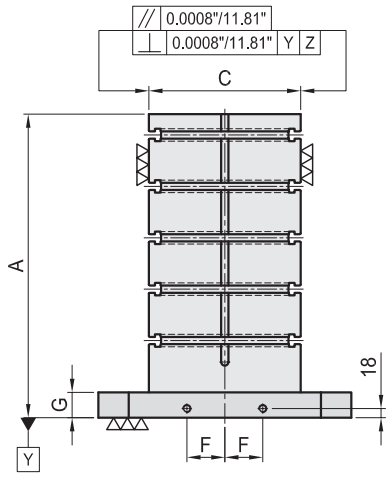


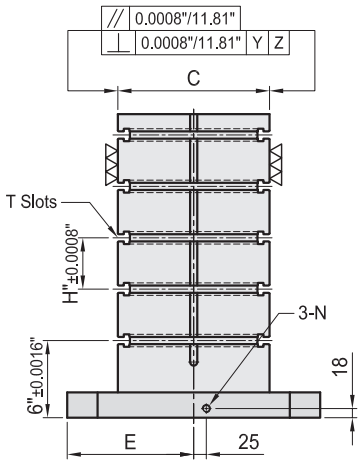


PLEASE NOTE THESE NUMBERS ARE ROUNDED. THIS CHART IS FOR REFERENCE ONLY.
PLEASE CONSULT CAD MODELS FOR EXACT DEMENSIONS AT WWW.TOMBSTONECITY.COM

| MODEL NO. | A" | B | | C" | D | D1" | E" | F | G" | M" | N" | H" | Mounting holes | lb |
|---|---|---|---|---|---|---|---|---|---|---|---|---|---|---|
| BP09-400400-0500-5 | 19.69 | 400 | 15.75" | 9.84 | 320 | 11.81 | 7.87 | 55 | 1.97 | 5/8 | 5/8 | 4 | 4 | 342 |
| BP09-400400-0650-5 | 25.59 | | | | | | | | | | | | | 419 |
| BP09-500500-0600-5 | 23.62 | 500 | 19.69" | 11.81 | 400 | 16.00 | 9.84 | 75 | 1.97 | 5/8 | 5/8 | 4 | 8 | 584 |
| BP09-500500-0750-5 | 29.53 | | | | | | | | | | | | | 639 |
| BP09-630630-0700-5 | 27.56 | 630 | 24.80" | 13.78 | 500 | 20.00 | 12.40 | 100 | 1.97 | 5/8 | 5/8 | 5 | 8 | 805 |
| BP09-630630-0850-5 | 33.46 | | | | | | | | | | | | | 992 |
| BP09-800800-0800-5 | 31.50 | 800 | 31.50" | 19.69 | 640 | 25.00 | 15.75 | 135 | 1.97 | 5/8 | 5/8 | 6 | 8 | 1407 |
| BP09-800800-1000-5 | 39.37 | | | | | | | | | | | | | 1742 |
| BP09-10001000-1000-5 | 39.37 | 1000 | 39.37" | 23.62 | – | – | 19.69 | – | 2.17 | 3/4 | 5/8 | 6.5 | 8 | 2527 |
| BP09-10001000-1250-5 | 49.21 | | | | | | | | | | | | | 2994 |

*Easily configured to meet your special needs.

# BP10

## DOUBLE SIDED TOOLING COLUMN

- Material: Cast Iron FC300(JIS) / Class 45 Equivalent
- Heat treated (Normalized)
- Features: Ready to accept a hole pattern for your special jig.
- Eye bolt & top cover included.
- Special design welcome.

**Tombstones are designed to fit both inch & MM pallets.**

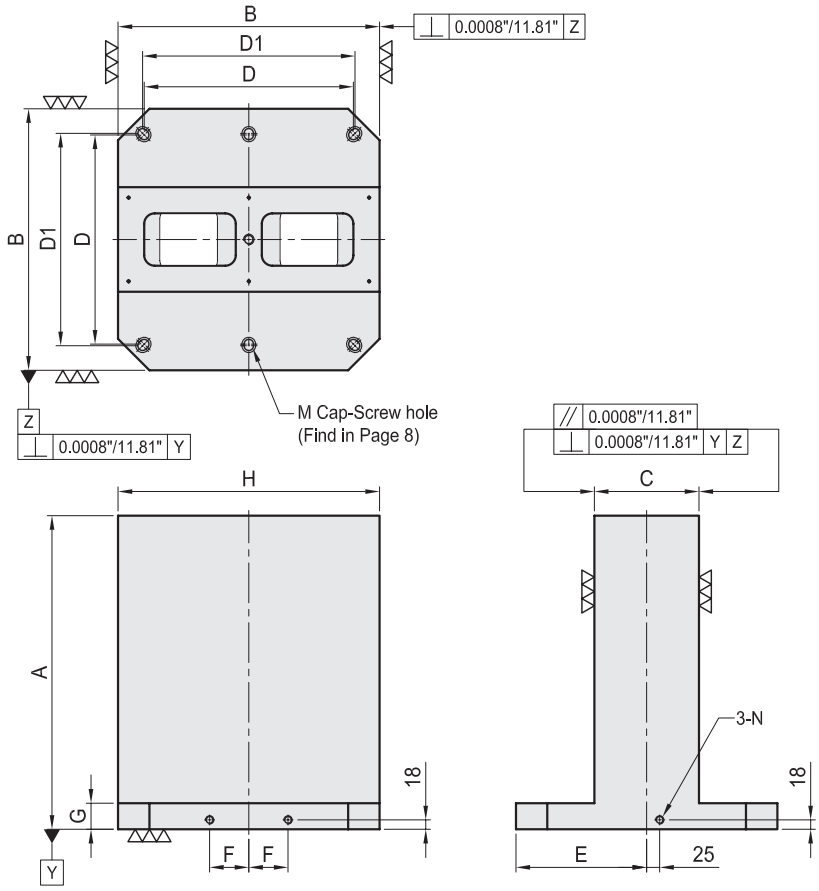


PLEASE NOTE THESE NUMBERS ARE ROUNDED. THIS CHART IS FOR REFERENCE ONLY.
PLEASE CONSULT CAD MODELS FOR EXACT DEMENSIONS AT WWW.TOMBSTONECITY.COM

| MODEL NO. | A" | B | | C" | D | D1" | E" | F | G" | H" | M" | N" | Mounting holes | lb |
|---|---|---|---|---|---|---|---|---|---|---|---|---|---|---|
| BP10-300300-0500 | 19.69 | 300 | 11.81" | 3.15 | 250 | 10.00 | 5.91 | 40 | 1.97 | 11.81 | 1/2 | 1/2 | 4 | 254 |
| BP10-400400-0500 | 19.69 | 400 | 15.75" | 5.91 | 320 | 11.81 | 7.87 | 55 | 1.97 | 15.75 | 5/8 | 5/8 | 4 | 375 |
| BP10-400400-0650 | 25.59 | | | | | | | | | | | | | 474 |
| BP10-500500-0600 | 23.62 | 500 | 19.69" | 7.87 | 400 | 16.00 | 9.84 | 75 | 1.97 | 19.69 | 5/8 | 5/8 | 6 | 595 |
| BP10-500500-0750 | 29.53 | | | | | | | | | | | | | 772 |
| BP10-630630-0700 | 27.56 | 630 | 24.80" | 9.84 | 500 | 20.00 | 12.40 | 100 | 1.97 | 24.80 | 5/8 | 5/8 | 6 | 981 |
| BP10-630630-0850 | 33.46 | | | | | | | | | | | | | 1147 |
| BP10-800800-0800 | 31.50 | 800 | 31.50" | 11.81 | 640 | 25.00 | 15.75 | 135 | 1.97 | 31.50 | 5/8 | 5/8 | 6 | 1488 |
| BP10-800800-1000 | 39.37 | | | | | | | | | | | | | 1797 |
| BP10-10001000-1000 | 39.37 | 1000 | 39.37" | 13.78 | – | – | 19.69 | – | 2.17 | 39.37 | 3/4 | 3/4 | 6 | 2562 |
| BP10-10001000-1250 | 49.21 | | | | | | | | | | | | | 3036 |

*Easily configured to meet your special needs.

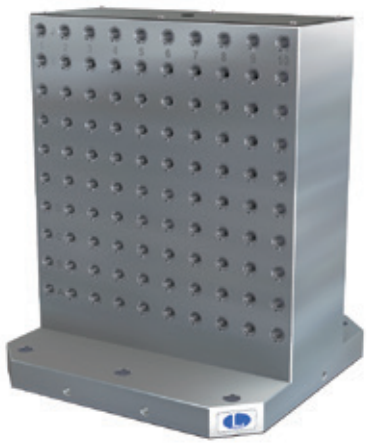

# BP11

## DOUBLE SIDED TOOLING COLUMN

- Material: Cast Iron FC300(JIS) / Class 45 Equivalent
- Heat treated (Normalized)
- Alignment Bushing: Steel Heat Treated HRC~60°
- Threaded Insert: Steel Heat Treated HRC~32°
- MTP hole spacing: 2"±0.0008"
- Features: Alignment bushing & thread insert at every hole location, easily adapts to standardized jig components.
- Eye bolt & top cover included.
- Special design welcome.

**Tombstones are designed to fit both inch & MM pallets.**

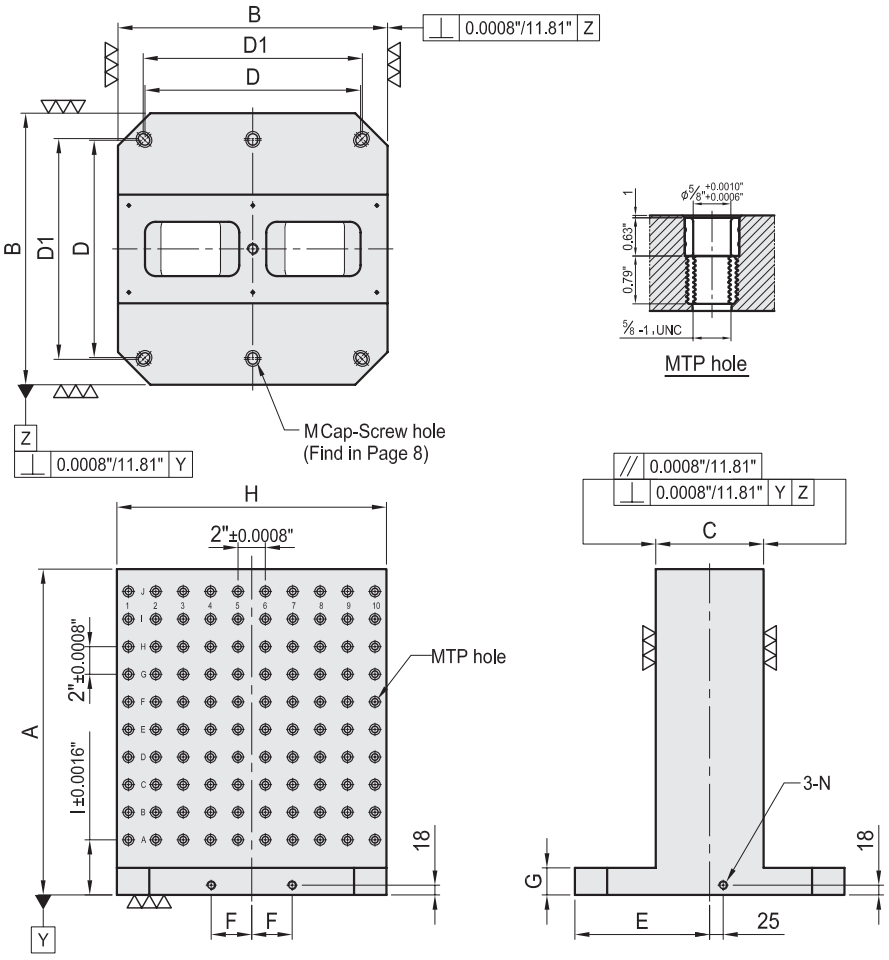


PLEASE NOTE THESE NUMBERS ARE ROUNDED. THIS CHART IS FOR REFERENCE ONLY.
PLEASE CONSULT CAD MODELS FOR EXACT DEMENSIONS AT WWW.TOMBSTONECITY.COM

| MODEL NO. | A" | B | | C" | D | D1" | E" | F | G" | M" | N" | H" | I" | MTP | Mounting holes | lb |
|---|---|---|---|---|---|---|---|---|---|---|---|---|---|---|---|---|
| BP11-400400-0500-5 | 19.69 | 400 | 15.75" | 5.91 | 320 | 11.81 | 7.87 | 55 | 1.97 | 5/8 | 5/8 | 15.75 | 4 | 128 | 4 | 353 |
| BP11-400400-0650-5 | 25.59 | | | | | | | | | | | | | 176 | | 452 |
| BP11-500500-0600-5 | 23.62 | 500 | 19.69" | 7.87 | 400 | 16.00 | 9.84 | 75 | 1.97 | 5/8 | 5/8 | 19.69 | 4 | 200 | 6 | 573 |
| BP11-500500-0750-5 | 29.53 | | | | | | | | | | | | | 260 | | 728 |
| BP11-630630-0700-5 | 27.56 | 630 | 24.80" | 9.84 | 500 | 20.00 | 12.40 | 100 | 1.97 | 5/8 | 5/8 | 24.80 | 4 | 288 | 6 | 948 |
| BP11-630630-0850-5 | 33.46 | | | | | | | | | | | | | 360 | | 1114 |
| BP11-800800-0800-5 | 31.50 | 800 | 31.50" | 11.81 | 640 | 25.00 | 15.75 | 135 | 1.97 | 5/8 | 5/8 | 31.50 | 5 | 390 | 6 | 1433 |
| BP11-800800-1000-5 | 39.37 | | | | | | | | | | | | | 510 | | 1742 |
| BP11-10001000-1000-5 | 39.37 | 1000 | 39.37" | 13.78 | – | – | 19.69 | – | 2.17 | 3/4 | 5/8 | 39.37 | 5 | 646 | 6 | 2553 |
| BP11-10001000-1250-5 | 49.21 | | | | | | | | | | | | | 836 | | 3032 |

*Easily configured to meet your special needs.
*Tombstones in stock have 5/8" mtp holes.Can be special ordered with 1/2" or metric mtp holes"

# BP12

## DOUBLE SIDED TOOLING COLUMN

- Material: Cast Iron FC300(JIS) / Class 45 Equivalent
- Heat treated (Normalized)
- Features: T-Slots running horizontally, key-way running vertically, easily adapts to standardized jig components.
- Eye bolt & top cover included.
- Special design welcome.

**Tombstones are designed to fit both inch & MM pallets.**

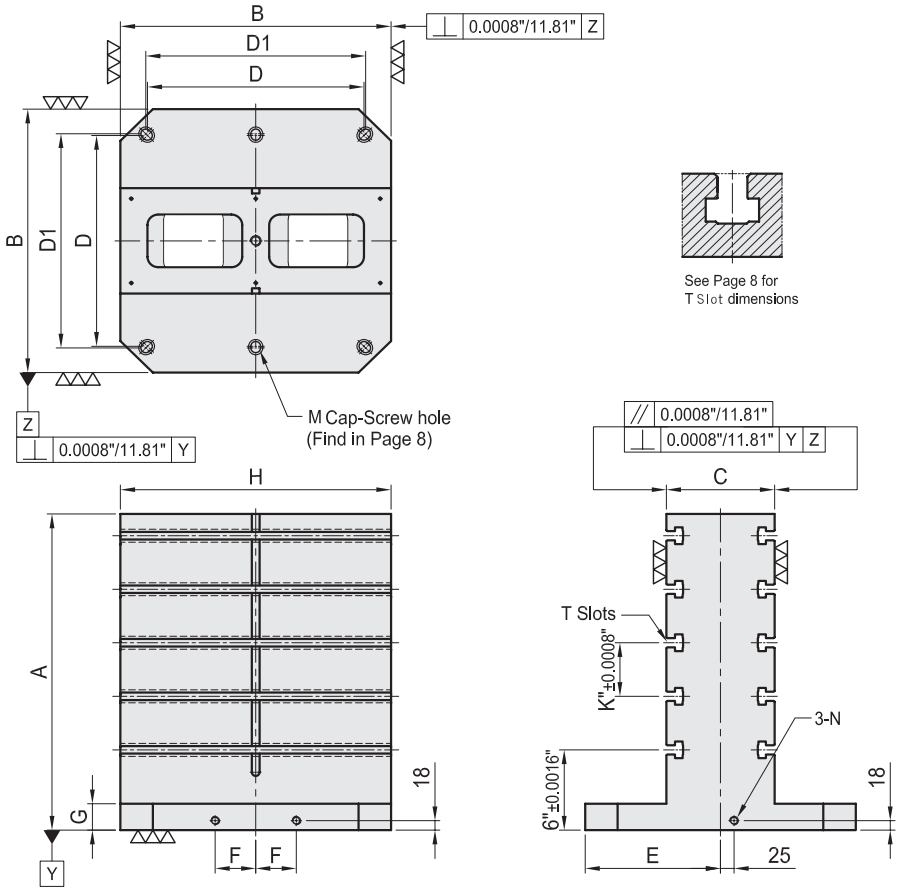


PLEASE NOTE THESE NUMBERS ARE ROUNDED. THIS CHART IS FOR REFERENCE ONLY.
PLEASE CONSULT CAD MODELS FOR EXACT DEMENSIONS AT WWW.TOMBSTONECITY.COM

| MODEL NO. | A" | B | | C" | D | D1" | E" | F | G" | M" | N" | H" | K" | Mounting holes | lb |
|---|---|---|---|---|---|---|---|---|---|---|---|---|---|---|---|
| BP12-400400-0500-5 | 19.69 | 400 | 15.75" | 5.91 | 320 | 11.81 | 7.87 | 55 | 1.97 | 5/8 | 5/8 | 15.75 | 4 | 4 | 364 |
| BP12-400400-0650-5 | 25.59 | | | | | | | | | | | | | | 463 |
| BP12-500500-0600-5 | 23.62 | 500 | 19.69" | 7.87 | 400 | 16.00 | 9.84 | 75 | 1.97 | 5/8 | 5/8 | 19.69 | 4 | 6 | 617 |
| BP12-500500-0750-5 | 29.53 | | | | | | | | | | | | | | 717 |
| BP12-630630-0700-5 | 27.56 | 630 | 24.80" | 9.84 | 500 | 20.00 | 12.40 | 100 | 1.97 | 5/8 | 5/8 | 24.80 | 5 | 6 | 948 |
| BP12-630630-0850-5 | 33.46 | | | | | | | | | | | | | | 1103 |
| BP12-800800-0800-5 | 31.50 | 800 | 31.50" | 11.81 | 640 | 25.00 | 15.75 | 135 | 1.97 | 5/8 | 5/8 | 31.50 | 6 | 6 | 1455 |
| BP12-800800-1000-5 | 39.37 | | | | | | | | | | | | | | 1731 |
| BP12-10001000-1000-5 | 39.37 | 1000 | 39.37" | 13.78 | – | – | 19.69 | – | 2.17 | 3/4 | 5/8 | 39.37 | 6 | 6 | 2553 |
| BP12-10001000-1250-5 | 49.21 | | | | | | | | | | | | | | 3032 |

*Easily configured to meet your special needs.
*Available with 1/2", 5/8" or MM T Slots.

# BP13

## MODULAR TOOLING COLUMN

- Material: Cast Iron FC300(JIS) / Class 45 Equivalent
- Heat treated (Normalized)
- Features: Modular quick-change system, simple 3 point mounting , use with BP14 & BP15 subplates.
- Eye bolt, top cover & side covers included.
- Special design welcome.

**Tombstones are designed to fit both inch & MM pallets.**

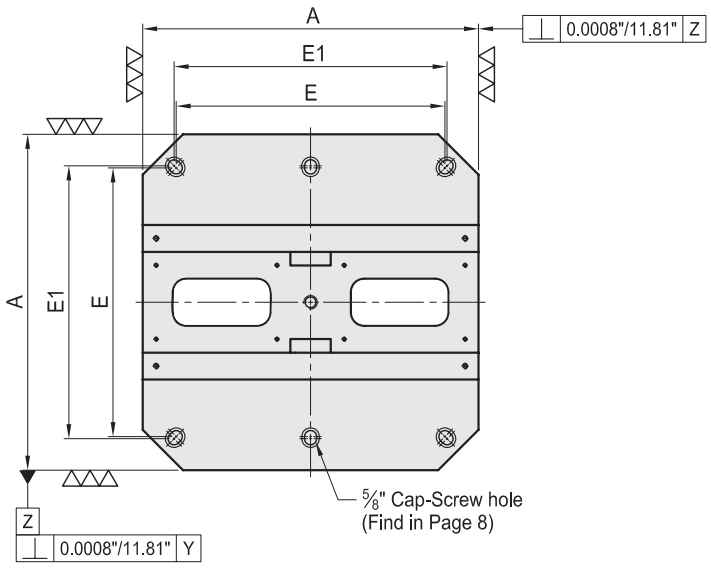


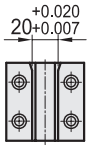


Figure K

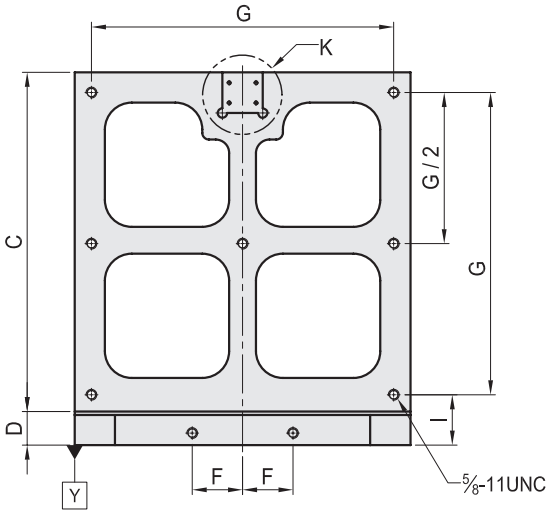


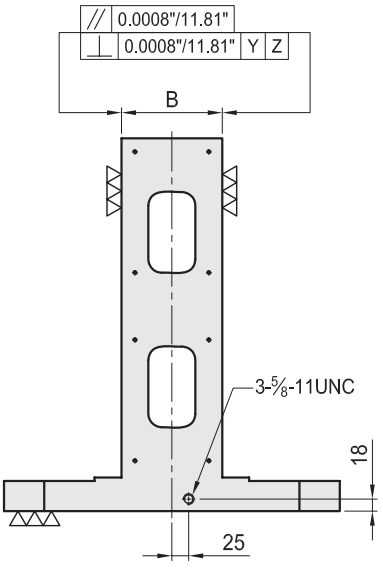


PLEASE NOTE THESE NUMBERS ARE ROUNDED. THIS CHART IS FOR REFERENCE ONLY.
PLEASE CONSULT CAD MODELS FOR EXACT DEMENSIONS AT WWW.TOMBSTONECITY.COM

| MODEL NO. | A | | B" | C" | D" | E | E1" | F | G" | I | Mounting holes | lb |
|---|---|---|---|---|---|---|---|---|---|---|---|---|
| BP13-400400-0450 | 400 | 15.75" | 5.12 | 15.94 | 1.97 | 320 | 11.81 | 55 | 13.78 | 70 | 4 | 276 |
| BP13-500500-0555 | 500 | 19.69" | 5.91 | 19.88 | 2.17 | 400 | 16.00 | 75 | 17.72 | 75 | 6 | 392 |
| BP13-630630-0690 | 630 | 24.80" | 8.66 | 25.00 | 2.36 | 500 | 20.00 | 100 | 22.83 | 80 | 6 | 772 |
| BP13-800800-0860 | 800 | 31.50" | 9.85 | 31.69 | 2.36 | 640 | 25.00 | 135 | 29.53 | 80 | 6 | 1136 |

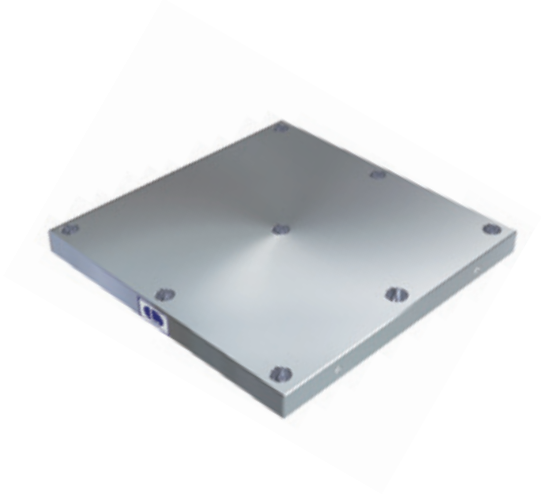

# BP14

## SUB-PLATE

- For Use With BP13 Modular Tombstone
- Material: Cast Iron FC300(JIS) / Class 45 Equivalent
- Heat treated (Normalized)
- Application: Modular quick change subplate, use with BP13.
- Features: Ready to accept a hole pattern for your special jig.
- Surface ground Top & Bottom.
- Special design welcome.

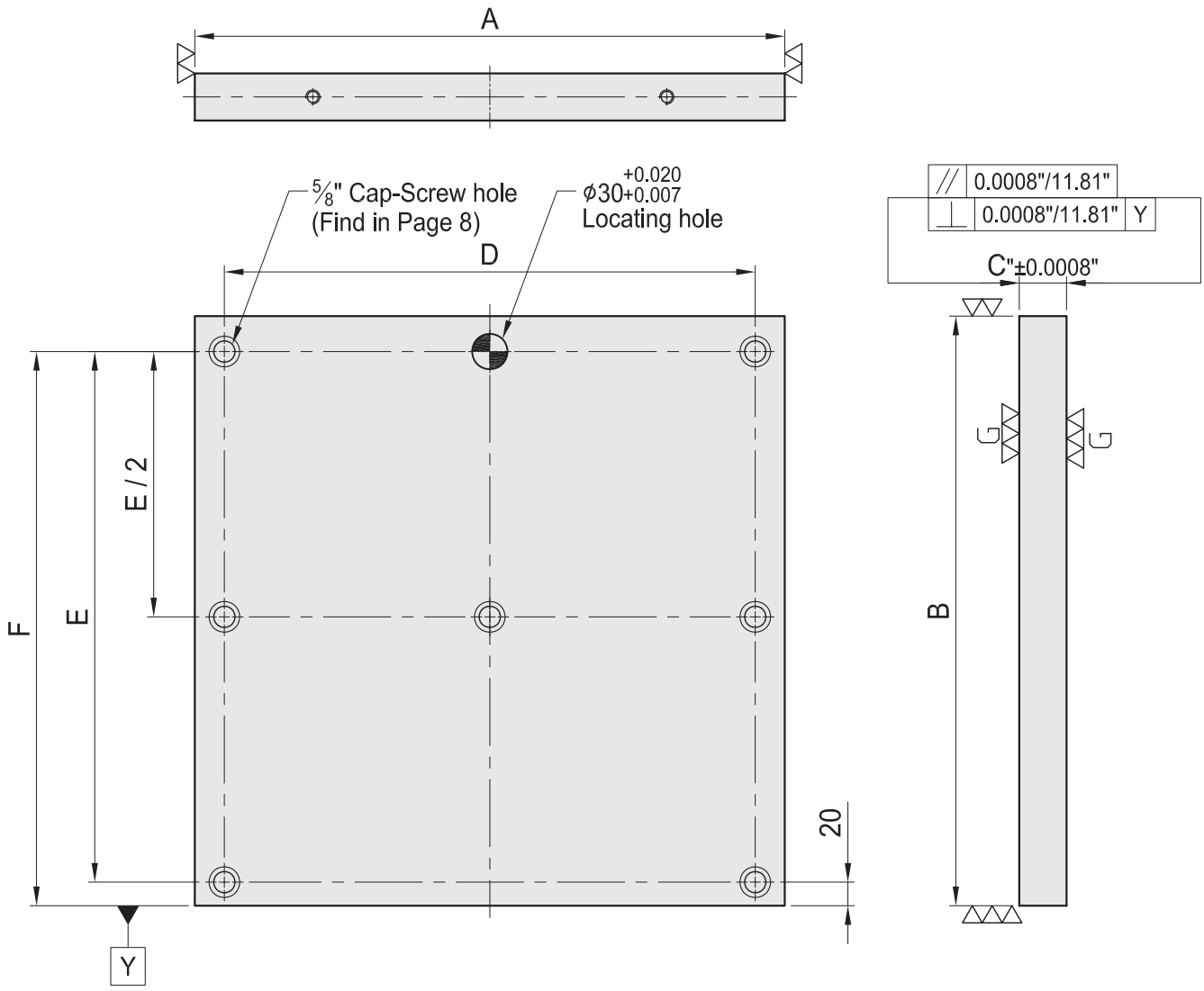


PLEASE NOTE THESE NUMBERS ARE ROUNDED. THIS CHART IS FOR REFERENCE ONLY.
PLEASE CONSULT CAD MODELS FOR EXACT DEMENSIONS AT WWW.TOMBSTONECITY.COM

| MODEL NO. | A | | B | | C" | D" | E" | F" | lb |
|---|---|---|---|---|---|---|---|---|---|
| BP14-40400-0400 | 400 | 15.75" | 400 | 15.75" | 1.57 | 13.78 | 13.78 | 14.57 | 101 |
| BP14-40500-0500 | 500 | 19.69" | 500 | 19.69" | 1.57 | 17.72 | 17.72 | 18.50 | 159 |
| BP14-40630-0630 | 630 | 24.80" | 630 | 24.80" | 1.57 | 22.83 | 22.83 | 23.62 | 251 |
| BP14-50800-0800 | 800 | 31.50" | 800 | 31.50" | 1.97 | 29.53 | 29.53 | 30.32 | 512 |

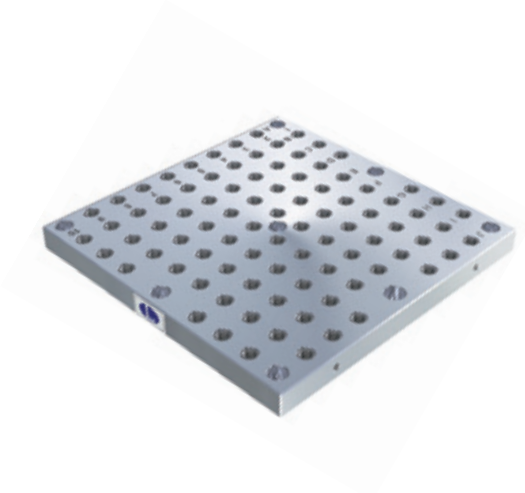

# BP15

## SUB-PLATE

- For Use With BP13 Modular Tombstone
- Material: Cast Iron FC300(JIS) / Class 45 Equivalent
- Heat treated (Normalized)
- Alignment Bushing: Steel Heat Treated HRC~60°
- Threaded Insert: Steel Heat Treated HRC~32°
- MTP hole spacing: 2"±0.0008"
- Application: Modular quick change subplate, use with BP13.
- Features: Alignment bushing & thread insert at every hole location, easily adapts to standardized jig components.
- Surface ground Top & Bottom.
- Special design welcome.

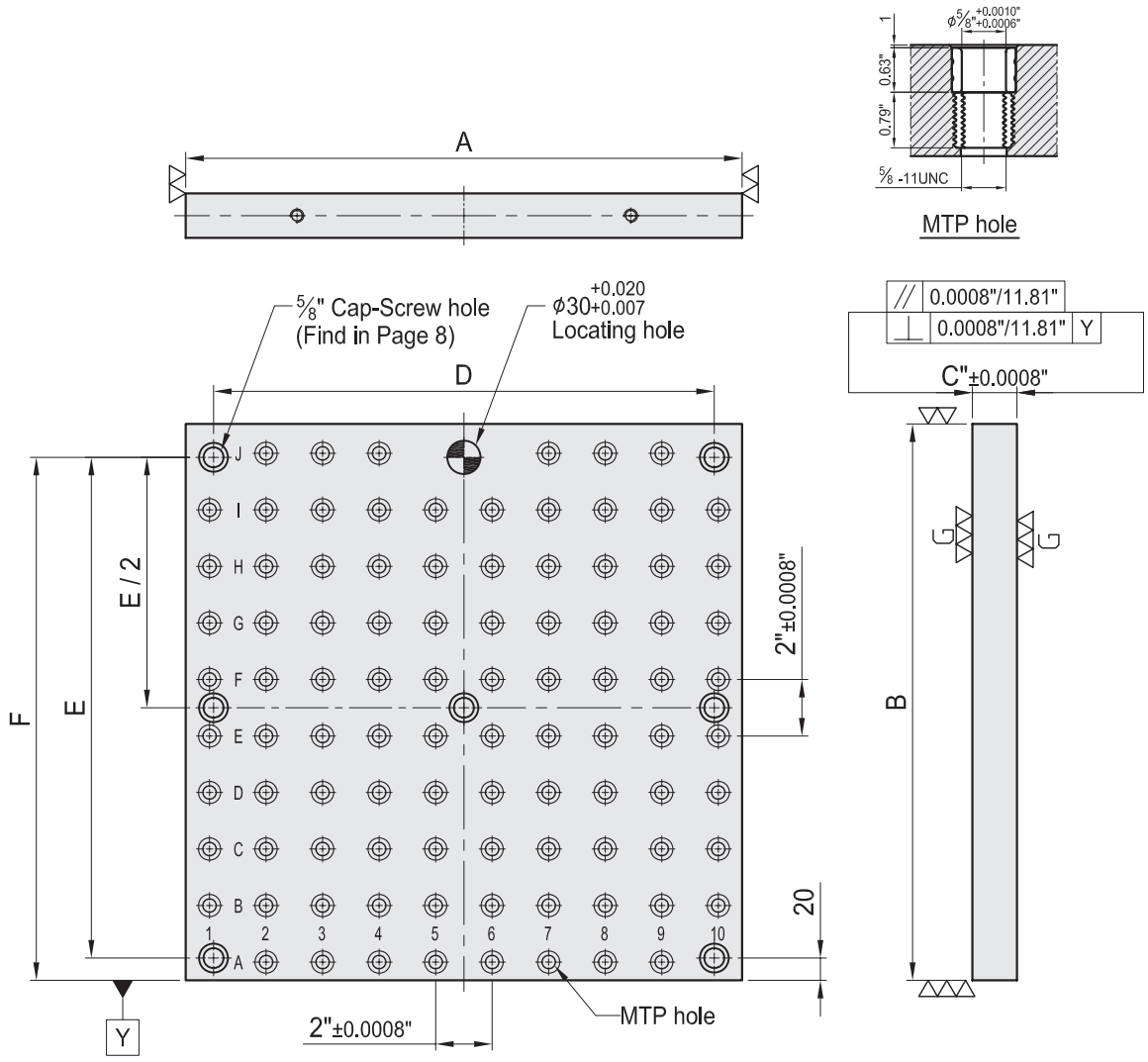


PLEASE NOTE THESE NUMBERS ARE ROUNDED. THIS CHART IS FOR REFERENCE ONLY.
PLEASE CONSULT CAD MODELS FOR EXACT DEMENSIONS AT WWW.TOMBSTONECITY.COM

| MODEL NO. | A | | B | | C" | D" | E" | F" | MTP | lb |
|---|---|---|---|---|---|---|---|---|---|---|
| BP15-40400-0400-5 | 400 | 15.75" | 400 | 15.75" | 1.57 | 13.78 | 13.78 | 14.57 | 58 | 90 |
| BP15-40500-0500-5 | 500 | 19.69" | 500 | 19.69" | 1.57 | 17.72 | 17.72 | 18.50 | 90 | 148 |
| BP15-40630-0630-5 | 630 | 24.80" | 630 | 24.80" | 1.57 | 22.83 | 22.83 | 23.62 | 138 | 232 |
| BP15-50800-0800-5 | 800 | 31.50" | 800 | 31.50" | 1.97 | 29.53 | 29.53 | 30.32 | 246 | 474 |

*Tombstones in stock have 5/8" mtp holes.Can be special ordered with 1/2" or metric mtp holes"

# BP16

## ROUND BASE PLATE

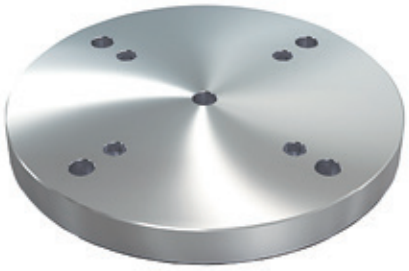

- Material: Cast Iron FC300(JIS) / Class 45 Equivalent
- Heat treated (Normalized)
- Features: Ready to accept a hole pattern for your special jig.
- Surface ground Top & Bottom.
- Special design welcome.

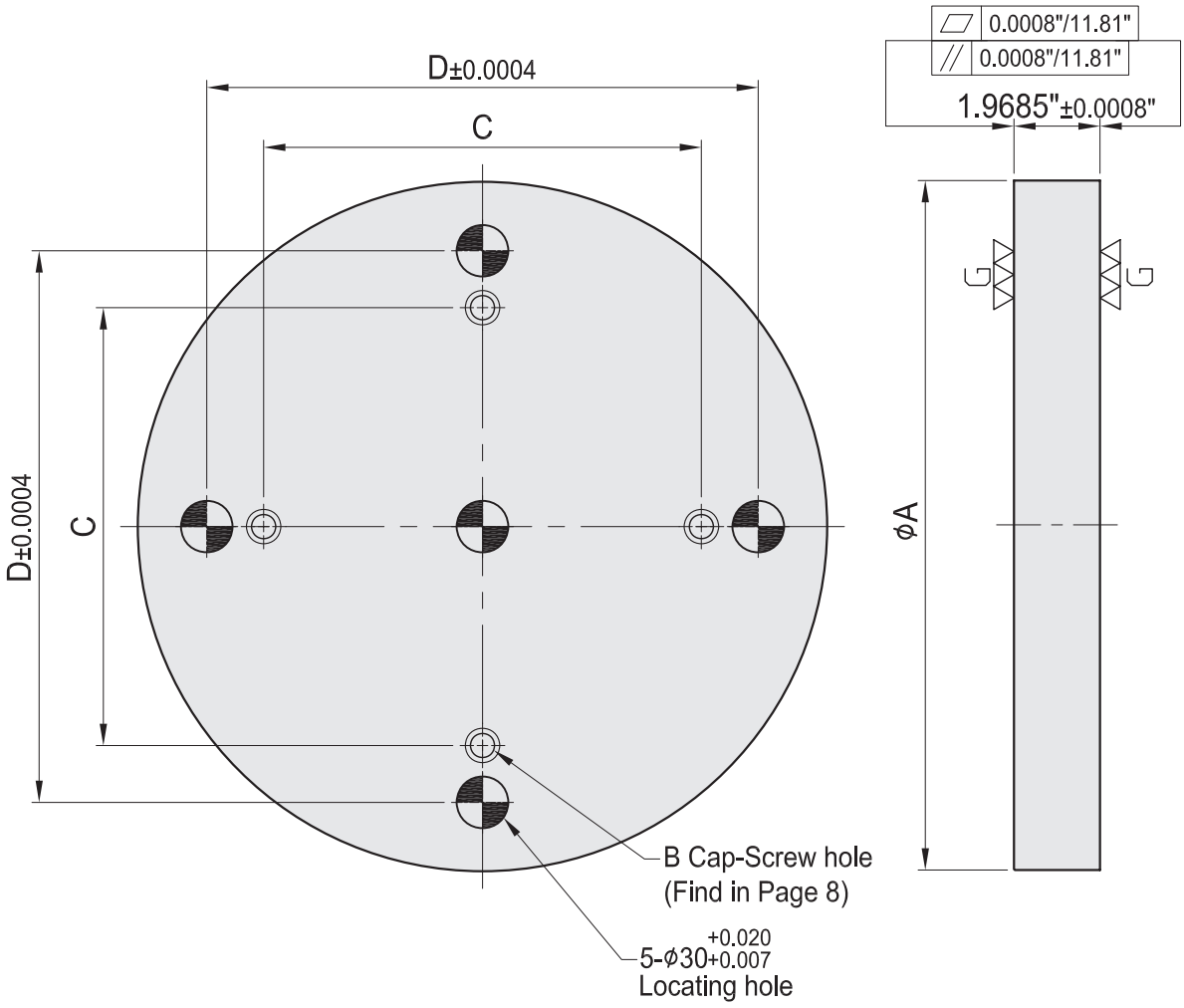


PLEASE NOTE THESE NUMBERS ARE ROUNDED. THIS CHART IS FOR REFERENCE ONLY.
PLEASE CONSULT CAD MODELS FOR EXACT DEMENSIONS AT WWW.TOMBSTONECITY.COM

| MODEL NO. | A | | B" | C" | D" | lb |
|---|---|---|---|---|---|---|
| BP16-50-0300 | 300 | 11.81" | 1/2 | 6 | 8.66 | 55 |
| BP16-50-0400 | 400 | 15.75" | 1/2 | 10 | 12.60 | 88 |
| BP16-50-0500 | 500 | 19.69" | 5/8 | 12 | 15.75 | 143 |
| BP16-50-0600 | 600 | 23.62" | 5/8 | 16 | 19.69 | 209 |

# BP17

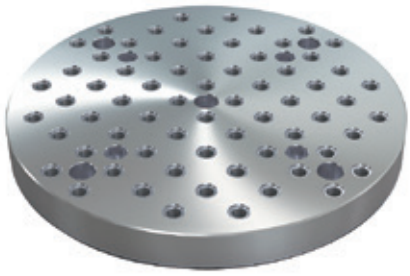

## ROUND BASE PLATE

- Material: Cast Iron FC300(JIS) / Class 45 Equivalent
- Heat treated (Normalized)
- Alignment Bushing: Steel Heat Treated HRC~60°
- Threaded Insert: Steel Heat Treated HRC~32°
- MTP hole spacing: 2"±0.0008"
- Application: NC Rotary Table or Indexer.
- Features: Alignment bushing & thread insert at every hole location, easily adapts to standardized jig components.
- Surface ground Top & Bottom.
- Special design welcome.

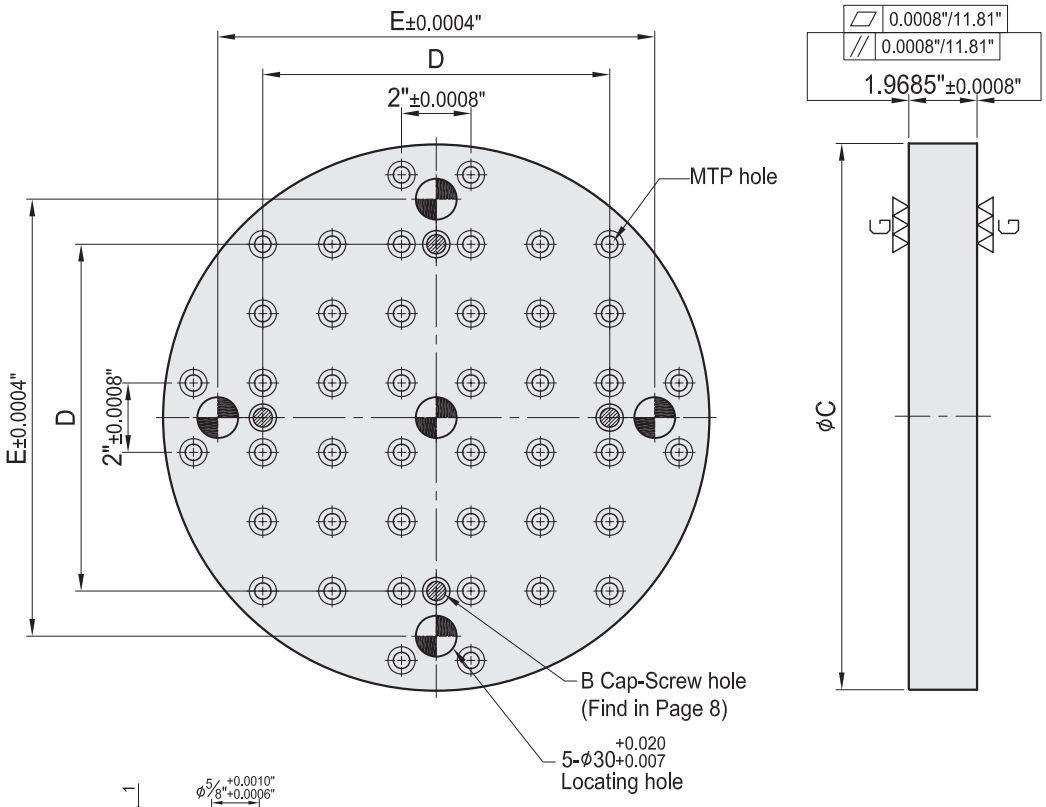


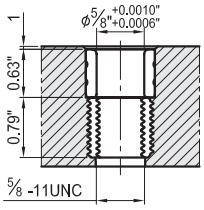


MTP hole

PLEASE NOTE THESE NUMBERS ARE ROUNDED. THIS CHART IS FOR REFERENCE ONLY.
PLEASE CONSULT CAD MODELS FOR EXACT DEMENSIONS AT WWW.TOMBSTONECITY.COM

| MODEL NO. | B" | C | | D" | E" | MTP | lb |
|---|---|---|---|---|---|---|---|
| BP17-50-0300-5 | 5/8 | 300 | 11.81" | 6 | 8.66 | 24 | 51 |
| BP17-50-0400-5 | | 400 | 15.75" | 10 | 12.60 | 44 | 93 |
| BP17-50-0500-5 | 5/8 | 500 | 19.69" | 12 | 15.75 | 68 | 150 |
| BP17-50-0600-5 | | 600 | 23.62" | 16 | 19.69 | 96 | 209 |

*Tombstones in stock have 5/8" mtp holes.Can be special ordered with 1/2" or metric mtp holes"

# BP18

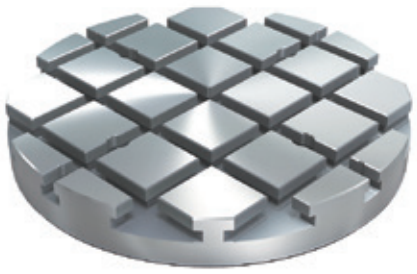

## ROUND BASE PLATE

- Material: Cast Iron FC300(JIS) / Class 45 Equivalent
- Heat treated (Normalized)
- Features: T-Slots running in 2 directions, easily adapts to standardized jig components.
- Surface ground Top & Bottom.
- Special design welcome.

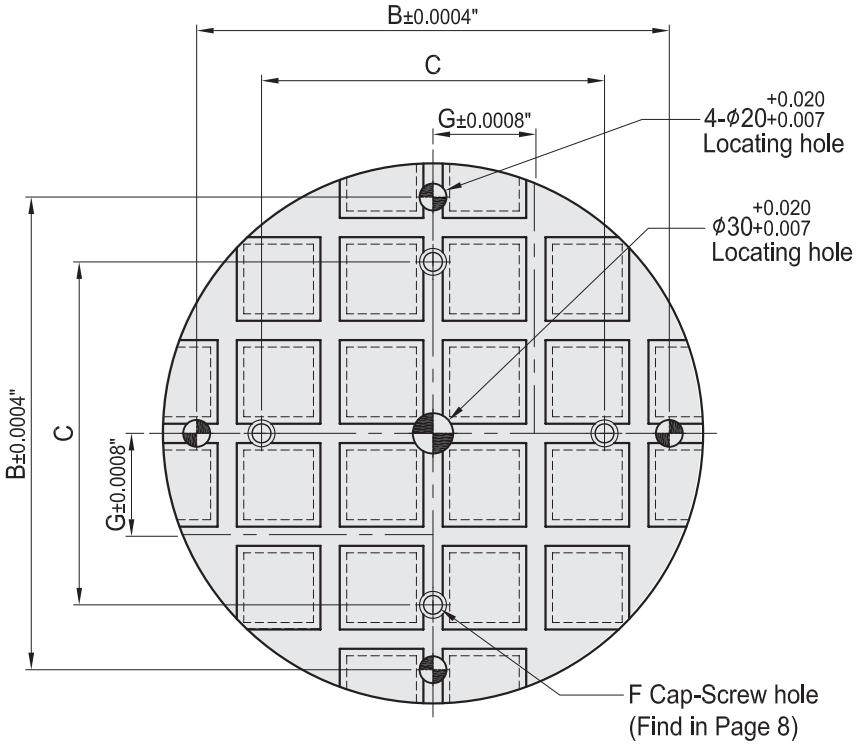


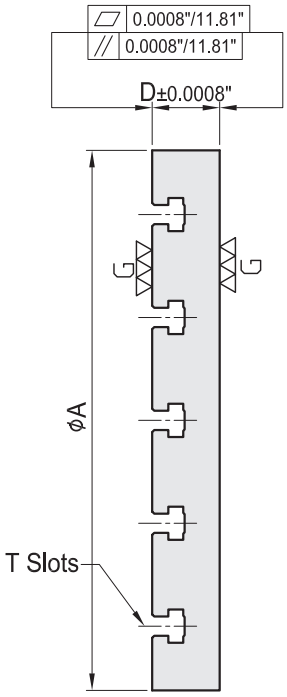


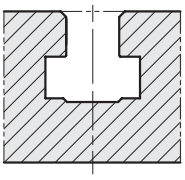

See Page 8 for
T Slot dimensions

PLEASE NOTE THESE NUMBERS ARE ROUNDED. THIS CHART IS FOR REFERENCE ONLY.
PLEASE CONSULT CAD MODELS FOR EXACT DEMENSIONS AT WWW.TOMBSTONECITY.COM

| MODEL NO. | A | | B" | C" | D" | F" | G" | lb |
|---|---|---|---|---|---|---|---|---|
| BP18-65-0300-5 | 300 | 11.81" | 9.84 | 6 | 2.56 | 5/8 | 3 | 75 |
| BP18-65-0400-5 | 400 | 15.75" | 13.78 | 10 | | | | 132 |
| BP18-65-0500-5 | 500 | 19.69" | 17.72 | 12 | 2.56 | 5/8 | 4 | 163 |
| BP18-65-0600-5 | 600 | 23.62" | 21.65 | 16 | | | | 243 |

*Available with 1/2", 5/8" or MM T Slots.

# BP18H-30

## HAAS RISER PLATE

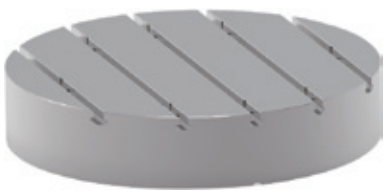

- Material: Cast Iron FC300(JIS) / Class 45 Equivalent
- Heat treated (Normalized)
- Features: T-Slots running one direction, easily adapts to standardized jig components.
- Surface ground Top & Bottom.

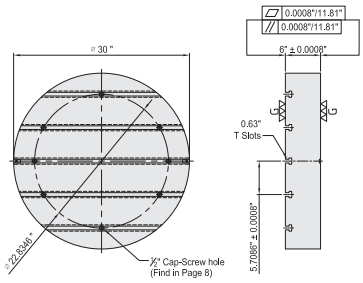


# BP18H-36

## HAAS RISER PLATE

- Material: Cast Iron FC300(JIS) / Class 45 Equivalent
- Heat treated (Normalized)
- Features: T-Slot running one direction, easily adapts to standardized jig components.
- Surface ground Top & Bottom.

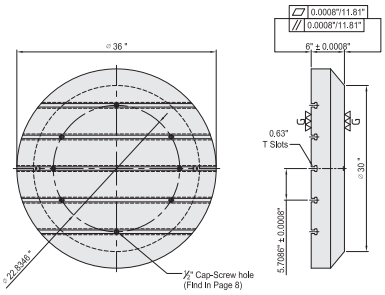


# BP18H-36-SQ

## HAAS RISER PLATE

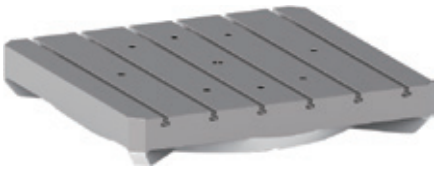

- Material: Cast Iron FC300(JIS) / Class 45 Equivalent
- Heat treated (Normalized)
- Features: T-Slot running one direction, easily adapts to standardized jig components.
- Surface ground Top & Bottom.

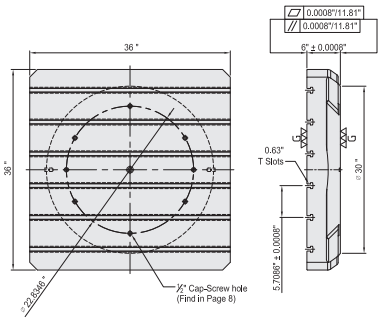

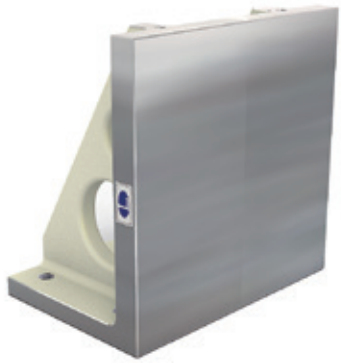

# BP20

## M/C ANGLE PLATE

- Material: Cast Iron FC300(JIS) / Class 45 Equivalent
- Heat treated (Normalized)
- Features: Ready to accept a hole pattern for your special jig.
- Special design welcome.

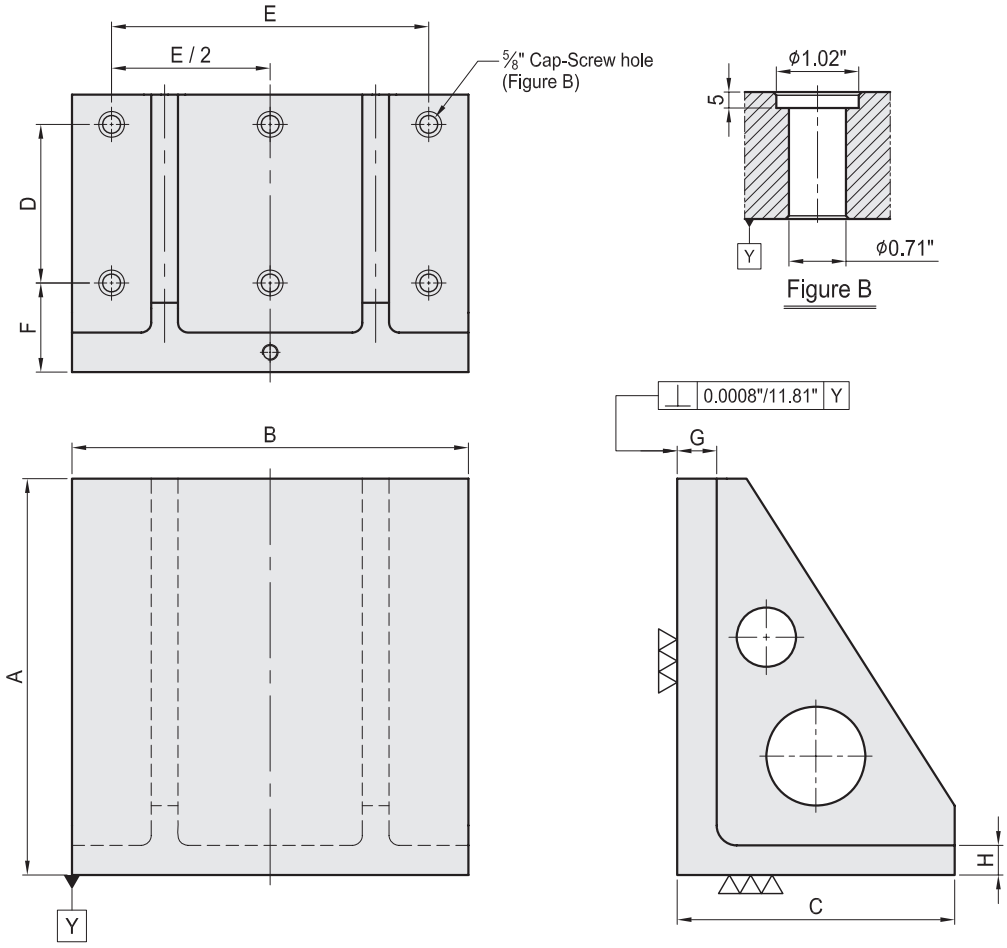


PLEASE NOTE THESE NUMBERS ARE ROUNDED. THIS CHART IS FOR REFERENCE ONLY.
PLEASE CONSULT CAD MODELS FOR EXACT DEMENSIONS AT WWW.TOMBSTONECITY.COM

| MODEL NO. | A" | B" | C" | D" | E" | F" | G" | H" | lb |
|---|---|---|---|---|---|---|---|---|---|
| BP20-220300-0300 | 11.81 | 11.81 | 8.66 | 3.94 | 9.84 | 3.54 | 1.57 | 1.18 | 110 |
| BP20-280400-0400 | 15.75 | 15.75 | 11.02 | 6.30 | 12.60 | 3.54 | 1.57 | 1.18 | 198 |
| BP20-340500-0500 | 19.69 | 19.69 | 13.39 | 7.87 | 15.75 | 3.54 | 1.97 | 1.38 | 364 |
| BP20-435630-0630 | 24.80 | 24.80 | 17.13 | 9.84 | 19.69 | 3.94 | 1.97 | 1.57 | 606 |
| BP20-525800-0800 | 31.50 | 31.50 | 20.67 | 12.60 | 25.20 | 4.53 | 1.97 | 1.77 | 1047 |
| BP20-4250300-1000 | 39.37 | 11.81 | 16.73 | 5.91 | 7.87 | 3.94 | 2.56 | 2.17 | 611 |
| BP20-5500400-1000 | 39.37 | 15.75 | 21.65 | – | – | – | 2.56 | 2.17 | 994 |
| BP20-6501000-1000 | | 39.37 | 25.59 | | | | | | 2346 |
| BP20-7500400-1500 | 59.06 | 15.75 | 29.53 | – | – | – | 2.56 | 2.17 | 1704 |
| BP20-7501000-1500 | | 39.37 | | | | | | | 3546 |
| BP20-7501500-1500 | | 59.06 | | | | | | | 5138 |

# BP21

## M/C ANGLE PLATE

- Material: Cast Iron FC300(JIS) / Class 45 Equivalent
- Heat treated (Normalized)
- Alignment Bushing: Steel Heat Treated HRC~60°
- Threaded Insert: Steel Heat Treated HRC~32°
- MTP hole spacing: 2"±0.0008"
- Features: Alignment bushing & thread insert at every hole location, easily adapts to standardized jig components.
- Special design welcome.

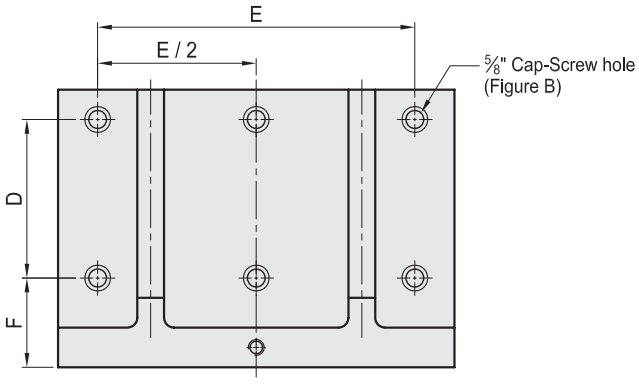


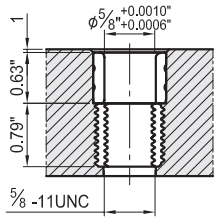


MTP hole

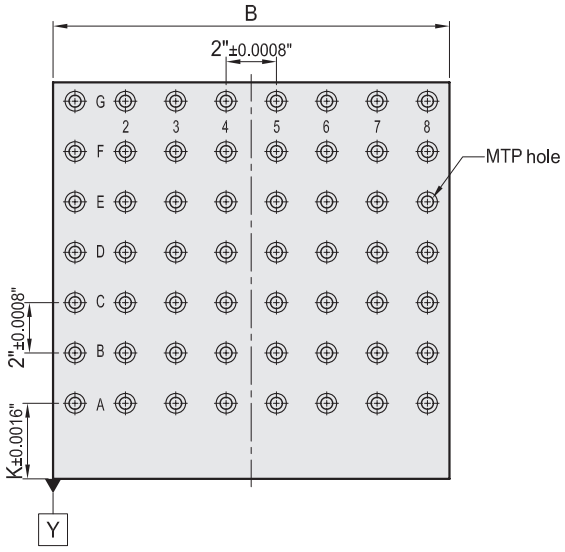


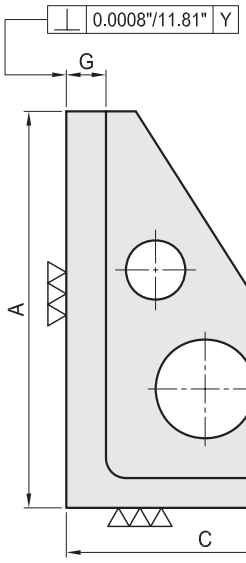


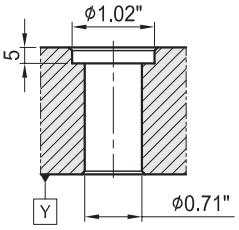


Figure B

PLEASE NOTE THESE NUMBERS ARE ROUNDED. THIS CHART IS FOR REFERENCE ONLY.
PLEASE CONSULT CAD MODELS FOR EXACT DEMENSIONS AT WWW.TOMBSTONECITY.COM

| MODEL NO. | A" | B" | C" | D" | E" | F" | G" | H" | K" | MTP | lb |
|---|---|---|---|---|---|---|---|---|---|---|---|
| BP21-220300-0300-5 | 11.81 | 11.81 | 8.66 | 3.94 | 9.84 | 3.54 | 1.58 | 1.18 | 3 | 30 | 101 |
| BP21-280400-0400-5 | 15.75 | 15.75 | 11.02 | 6.30 | 12.60 | 3.54 | 1.58 | 1.18 | 3 | 56 | 187 |
| BP21-340500-0500-5 | 19.69 | 19.69 | 13.39 | 7.87 | 15.75 | 3.54 | 1.97 | 1.38 | 3 | 90 | 375 |
| BP21-435630-0630-5 | 24.80 | 24.80 | 17.13 | 9.84 | 19.69 | 3.94 | 1.97 | 1.57 | 3 | 132 | 650 |
| BP21-525800-0800-5 | 31.50 | 31.50 | 20.67 | 12.60 | 25.20 | 4.53 | 1.97 | 1.77 | 3 | 224 | 1036 |

*Tombstones in stock have 5/8" mtp holes.Can be special ordered with 1/2" or metric mtp holes"

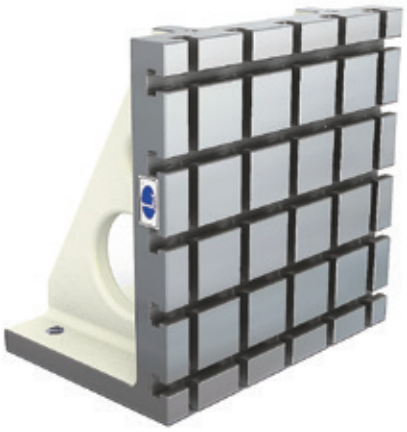

# BP22

## M/C ANGLE PLATE

- Material: Cast Iron FC300(JIS) / Class 45 Equivalent
- Heat treated (Normalized)
- Features: T-Slots running in 2 directions, easily adapts to standardized jig components.
- Special design welcome.

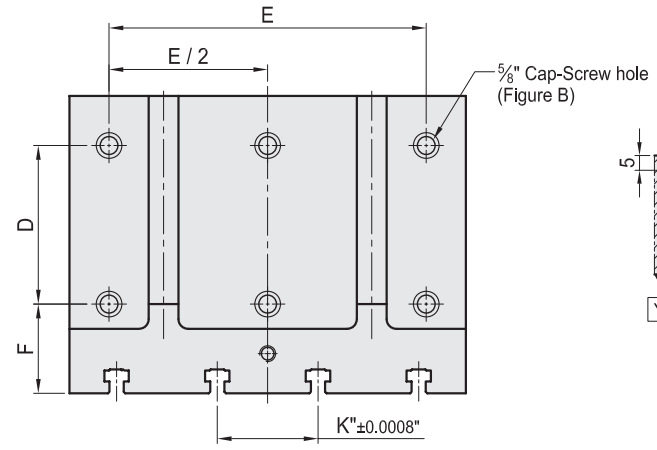


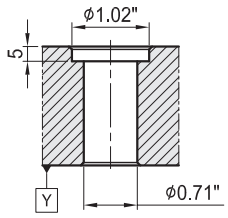


Figure B

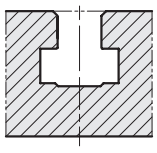

See Page 8 for
T Slots dimensions

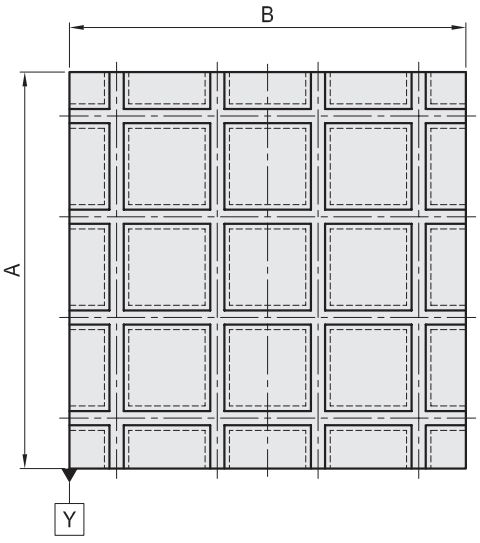


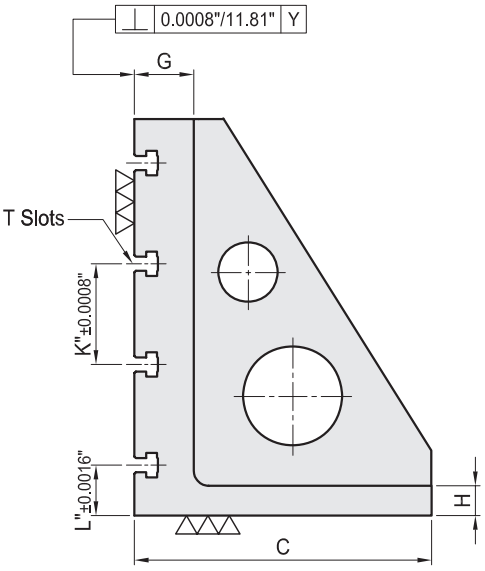


PLEASE NOTE THESE NUMBERS ARE ROUNDED. THIS CHART IS FOR REFERENCE ONLY.
PLEASE CONSULT CAD MODELS FOR EXACT DEMENSIONS AT WWW.TOMBSTONECITY.COM

| MODEL NO. | A" | B" | C" | D" | E" | F" | G" | H" | K" | L" | lb |
|---|---|---|---|---|---|---|---|---|---|---|---|
| BP22-220300-0300-5 | 11.81 | 11.81 | 8.66 | 3.94 | 9.84 | 3.54 | 2.36 | 1.18 | 4 | 2.0 | 112 |
| BP22-300400-0400-5 | 15.75 | 15.75 | 11.81 | 6.30 | 12.60 | | | | | | 212 |
| BP22-350500-0500-5 | 19.69 | 19.69 | 13.78 | 7.87 | 15.75 | 3.54 | 2.36 | 1.38 | 4 | 2.0 | 357 |
| BP22-450630-0630-5 | 24.80 | 24.80 | 17.72 | 9.84 | 19.69 | 3.94 | 2.56 | 1.58 | 5 | 2.5 | 628 |
| BP22-550800-0800-5 | 31.50 | 31.50 | 21.65 | 12.60 | 25.20 | 4.53 | 2.95 | 1.77 | 6 | 4.0 | 1224 |

*Available with 1/2", 5/8" or MM T Slots.

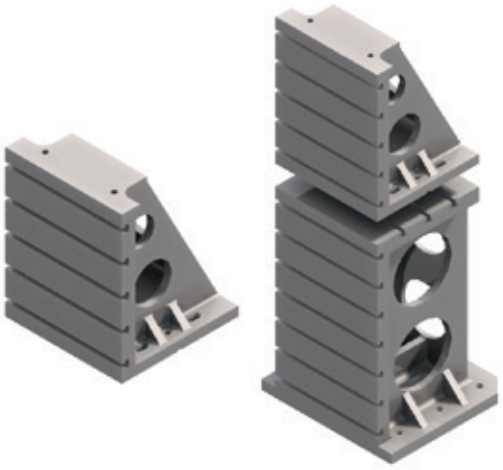

# BP22S-T

## STACKING ANGLE PLATE-TOP

- Material: Cast Iron FC300(JIS) / Class 45 Equivalent
- Heat treated (Normalized)
- Features: T-Slots running one direction, easily adapts to standardized jig components.
- Special design welcome.

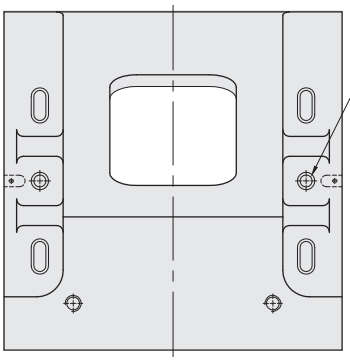


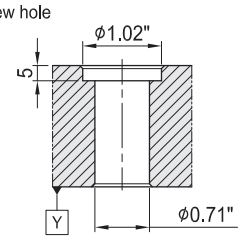


Figure B

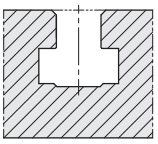

See Page 8 for
T Slot dimensions

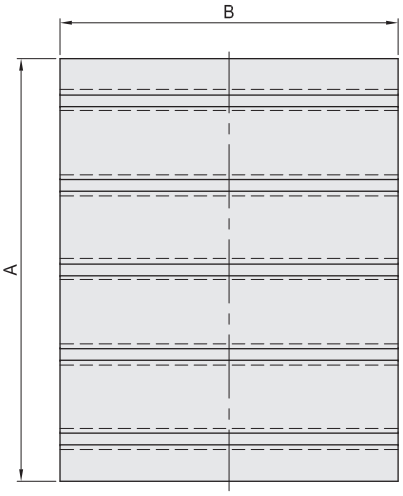


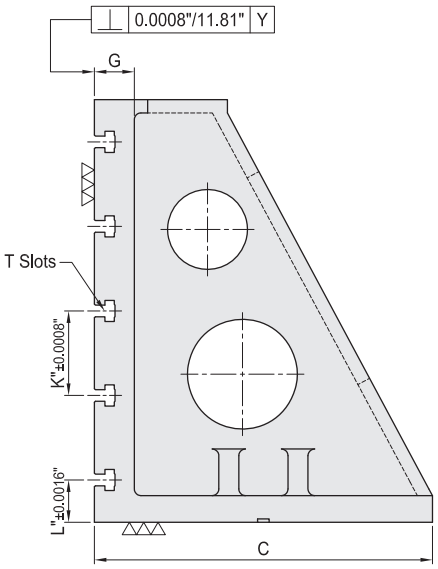


PLEASE NOTE THESE NUMBERS ARE ROUNDED. THIS CHART IS FOR REFERENCE ONLY.
PLEASE CONSULT CAD MODELS FOR EXACT DEMENSIONS AT WWW.TOMBSTONECITY.COM

**TOP**

| MODEL NO. | A" | B" | C" |
|---|---|---|---|
| BP22S-T0900 | 23.62 | 19.69 | 19.69 |
| BP22S-T1200 | 35.43 | 27.56 | 27.56 |

*Available with 1/2", 5/8" or MM T Slots.

# BP22S-B

## STACKING ANGLE PLATE-BOTTOM

- Material: Cast Iron FC300(JIS) / Class 45 Equivalent
- Heat treated (Normalized)
- Features: T-Slots running one direction, easily adapts to standardized jig components.
- Special design welcome.

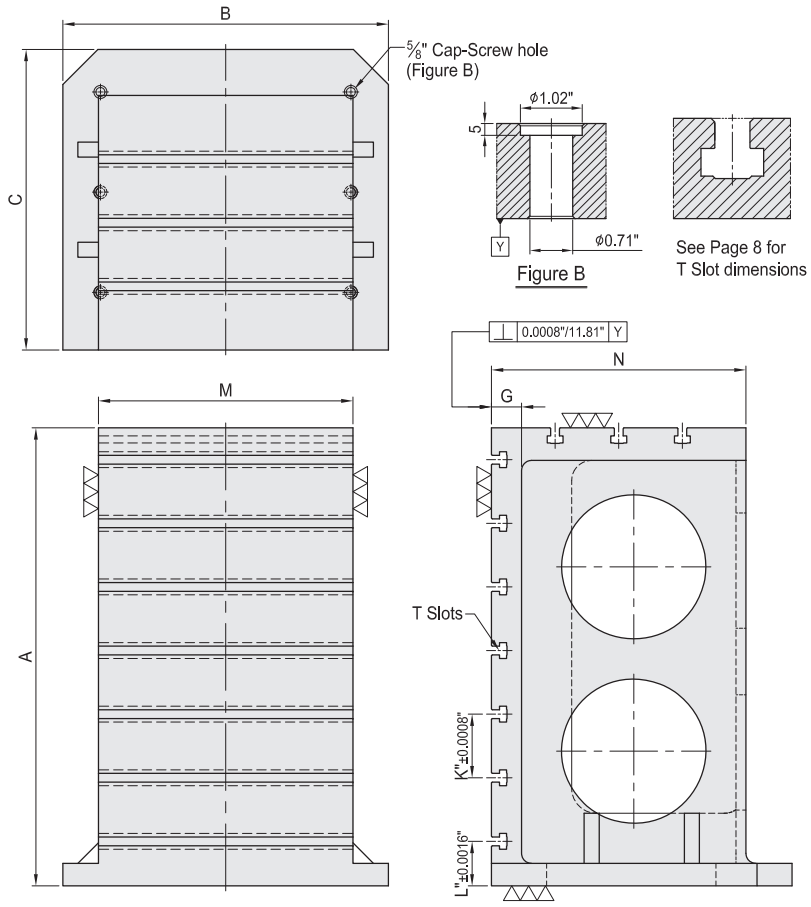


PLEASE NOTE THESE NUMBERS ARE ROUNDED. THIS CHART IS FOR REFERENCE ONLY.
PLEASE CONSULT CAD MODELS FOR EXACT DEMENSIONS AT WWW.TOMBSTONECITY.COM

**Bottom**

| MODEL NO. | A" | B" | C" | M" | N" |
|---|---|---|---|---|---|
| BP22S-B0900 | 35.43 | 24.80 | 24.80 | 19.69 | 19.69 |
| BP22S-B1200 | 47.24 | 31.50 | 31.50 | 27.56 | 27.56 |

*Available with 1/2", 5/8" or MM T Slots.

# BP23

## MC NARROW ANGLE PLATE

- Material: Cast Iron FC300(JIS) / Class 45 Equivalent
- Heat treated (Normalized)
- Features: Ready to accept a hole pattern for your special jig.
- Special design welcome.

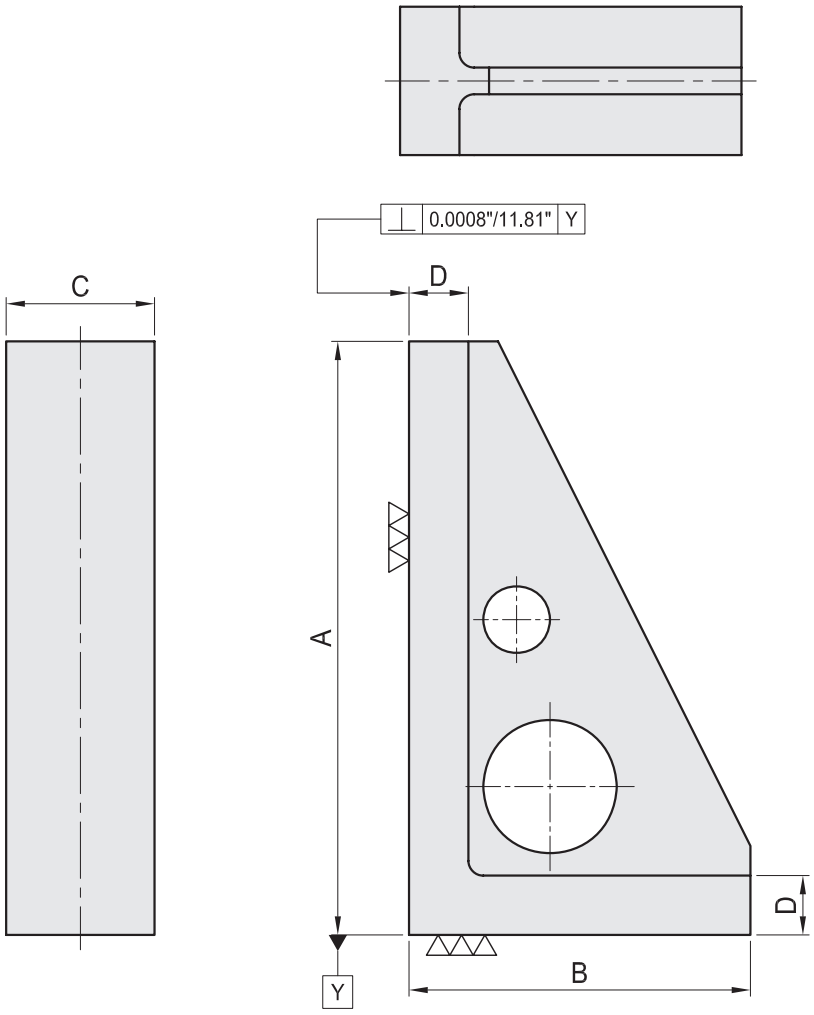


PLEASE NOTE THESE NUMBERS ARE ROUNDED. THIS CHART IS FOR REFERENCE ONLY.
PLEASE CONSULT CAD MODELS FOR EXACT DEMENSIONS AT WWW.TOMBSTONECITY.COM

| MODEL NO. | A" | B" | C" | D" | lb |
|---|---|---|---|---|---|
| BP23-180100-0300 | 11.81 | 7.09 | 3.94 | 1.57 | 31 |
| BP23-230100-0400 | 15.75 | 9.06 | 3.94 | 1.57 | 44 |
| BP23-280100-0500 | 19.69 | 11.02 | 3.94 | 1.57 | 55 |

# BP24

## MC NARROW ANGLE PLATE

- Material: Cast Iron FC300(JIS) / Class 45 Equivalent
- Heat treated (Normalized)
- Alignment Bushing: Steel Heat Treated HRC~60°
- Threaded Insert: Steel Heat Treated HRC~32°
- MTP hole spacing: 2"±0.0008"
- Features: Alignment bushing & thread insert at every hole location, easily adapts to standardized jig components.
- Special design welcome.

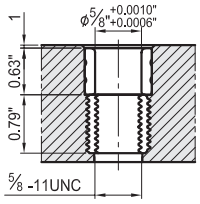


MTP hole

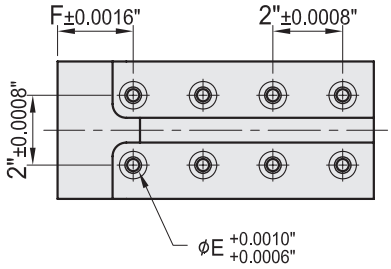


ØE +0.0010" +0.0006"
Location-Bolt hole

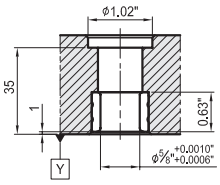


Figure E

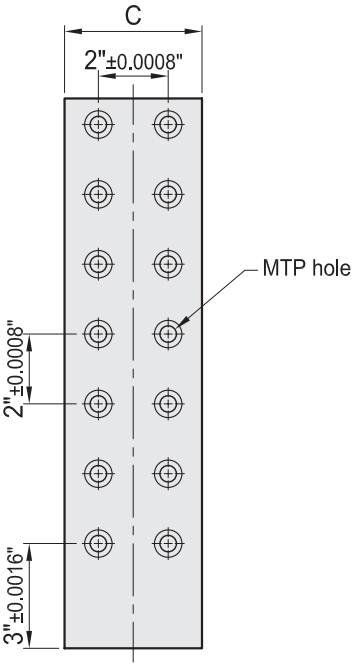


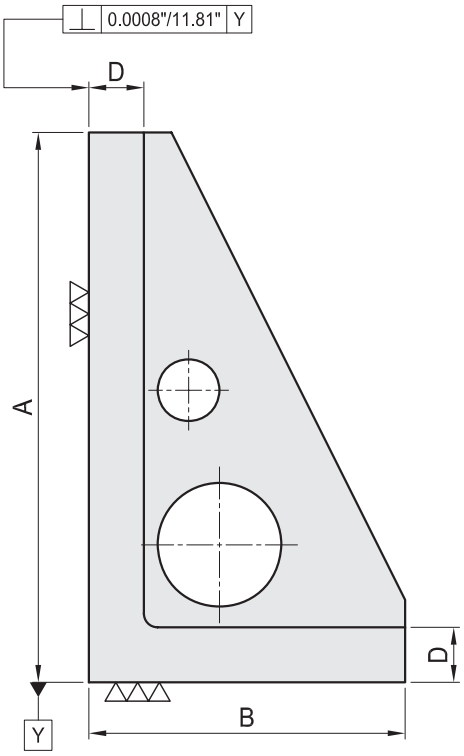


PLEASE NOTE THESE NUMBERS ARE ROUNDED. THIS CHART IS FOR REFERENCE ONLY.
PLEASE CONSULT CAD MODELS FOR EXACT DEMENSIONS AT WWW.TOMBSTONECITY.COM

| MODEL NO. | A" | B" | C" | D" | E" | F" | MTP | lb |
|---|---|---|---|---|---|---|---|---|
| BP24-180100-0300-5 | 11.81 | 7.09 | 3.94 | 1.57 | 5/8 | 2.17 | 10 | 29 |
| BP24-230100-0400-5 | 15.75 | 9.06 | 3.94 | 1.57 | 5/8 | 2.17 | 14 | 44 |
| BP24-280100-0500-5 | 19.69 | 11.02 | 3.94 | 1.57 | 5/8 | 2.17 | 18 | 53 |

*Tombstones in stock have 5/8" mtp holes.Can be special ordered with 1/2" or metric mtp holes"

# BP25

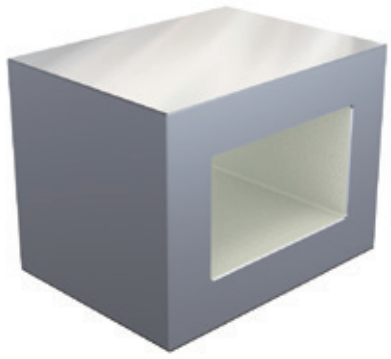

## RECTANGULAR CAST SECTION

- Material: Cast Iron FC300(JIS) / Class 45 Equivalent
- Heat treated (Normalized)
- Features: Ready to accept a hole pattern for your special jig.
- Special design welcome.

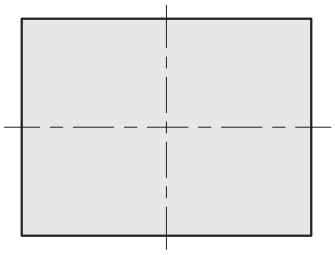

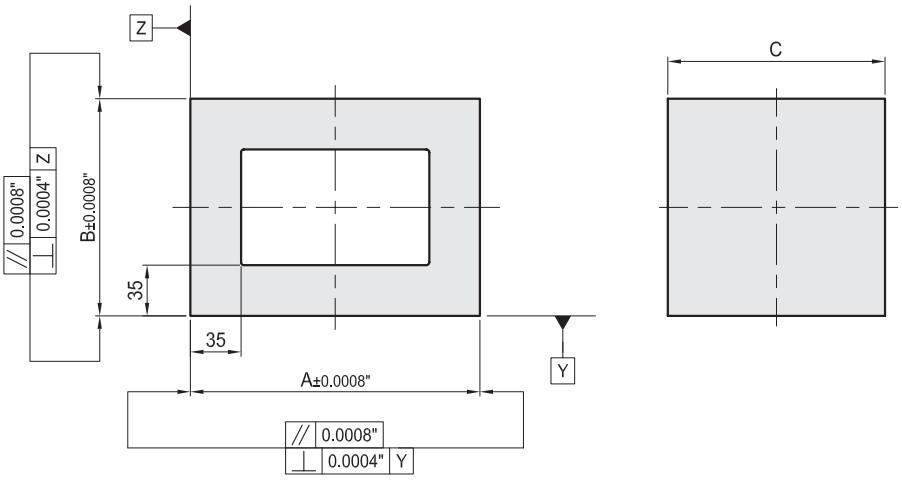


PLEASE NOTE THESE NUMBERS ARE ROUNDED. THIS CHART IS FOR REFERENCE ONLY.
PLEASE CONSULT CAD MODELS FOR EXACT DEMENSIONS AT WWW.TOMBSTONECITY.COM

| MODEL NO. | A" | B" | C" | lb |
|---|---|---|---|---|
| BP25-200150-0150 | 7.87 | 5.91 | 5.91 | 51 |
| BP25-250150-0200 | 9.84 | 7.87 | 5.91 | 66 |
| BP25-300200-0250 | 11.80 | 9.84 | 7.87 | 123 |

# BP26

## RECTANGULAR CAST SECTION

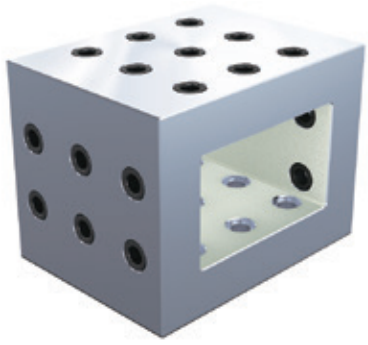

- Material: Cast Iron FC300(JIS) / Class 45 Equivalent
- Heat treated (Normalized)
- Alignment Bushing: Steel Heat Treated HRC~60°
- Threaded Insert: Steel Heat Treated HRC~32°
- MTP hole spacing: 2"±0.0008"
- Features: Alignment bushing & thread insert at every hole location, easily adapts to standardized jig components.
- Special design welcome.

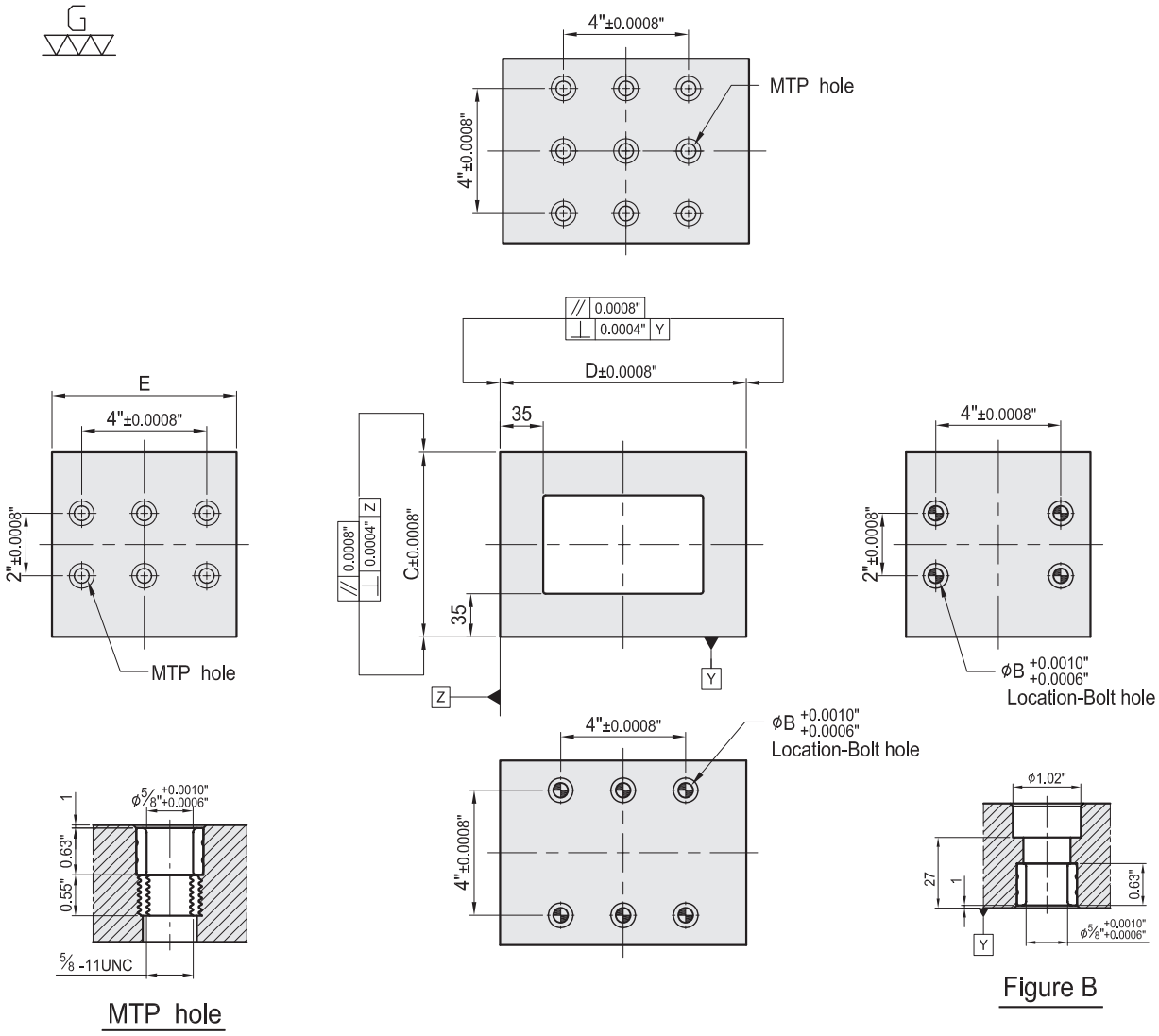


MTP hole

Figure B

PLEASE NOTE THESE NUMBERS ARE ROUNDED. THIS CHART IS FOR REFERENCE ONLY.
PLEASE CONSULT CAD MODELS FOR EXACT DEMENSIONS AT WWW.TOMBSTONECITY.COM

| MODEL NO. | B" | C" | D" | E" | MTP | Mounting holes | lb |
|---|---|---|---|---|---|---|---|
| BP26-200150-0150-5 | 5/8 | 5.91 | 7.87 | 5.91 | 15 | 10 | 64 |
| BP26-250150-0200-5 | 5/8 | 7.87 | 9.84 | 5.91 | 21 | 14 | 66 |

*Tombstones in stock have 5/8" mtp holes.Can be special ordered with 1/2" or metric mtp holes"

# BP27

## RECTANGULAR CAST SECTION

- Material: Cast Iron FC300(JIS) / Class 45 Equivalent
- Heat treated (Normalized)
- Features: Ready to accept a hole pattern for your special jig.
- Special design welcome.

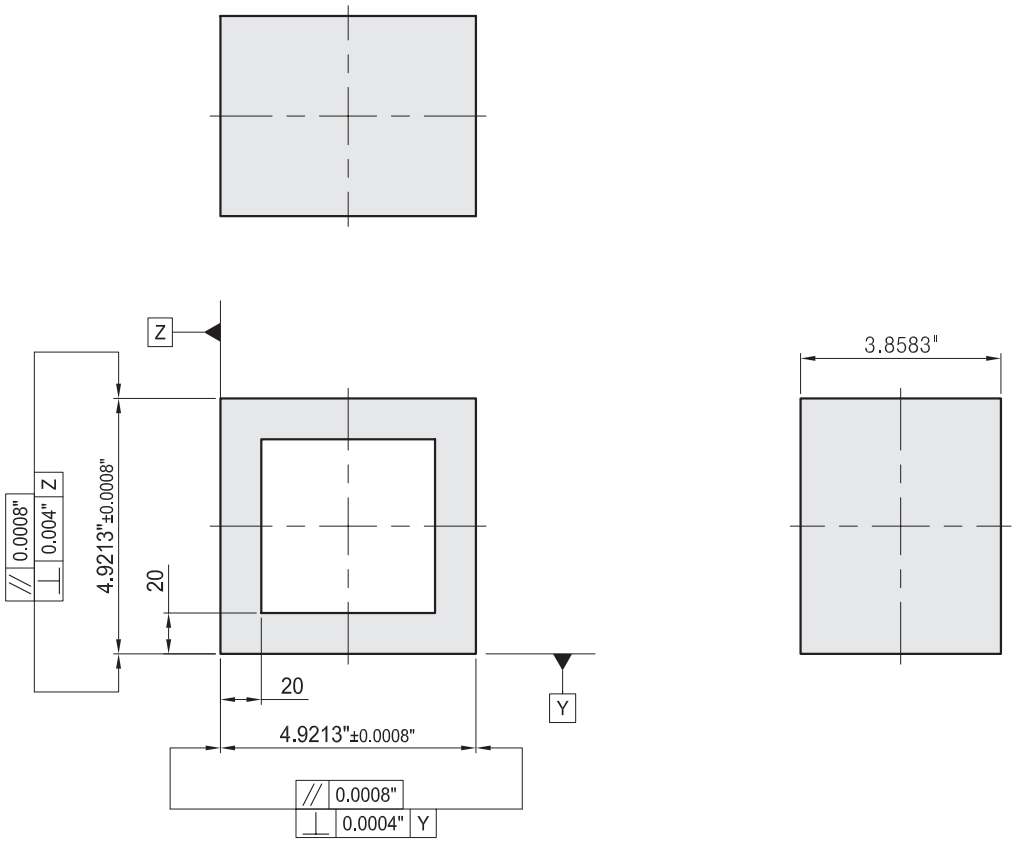


PLEASE NOTE THESE NUMBERS ARE ROUNDED. THIS CHART IS FOR REFERENCE ONLY.
PLEASE CONSULT CAD MODELS FOR EXACT DEMENSIONS AT WWW.TOMBSTONECITY.COM

| MODEL NO. | lb |
|---|---|
| BP27-125098-125 | 13 |

# BP28

## RECTANGULAR CAST SECTION

- Material: Cast Iron FC300(JIS) / Class 45 Equivalent
- Heat treated (Normalized)
- Features: Alignment bushing & thread insert at every hole location, easily adapts to standardized jig components.
- Special design welcome.

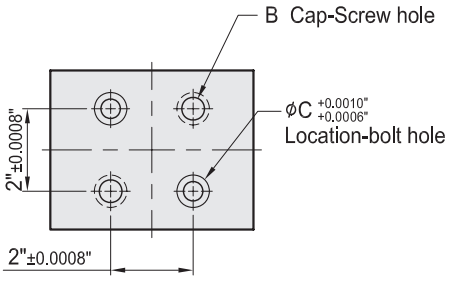


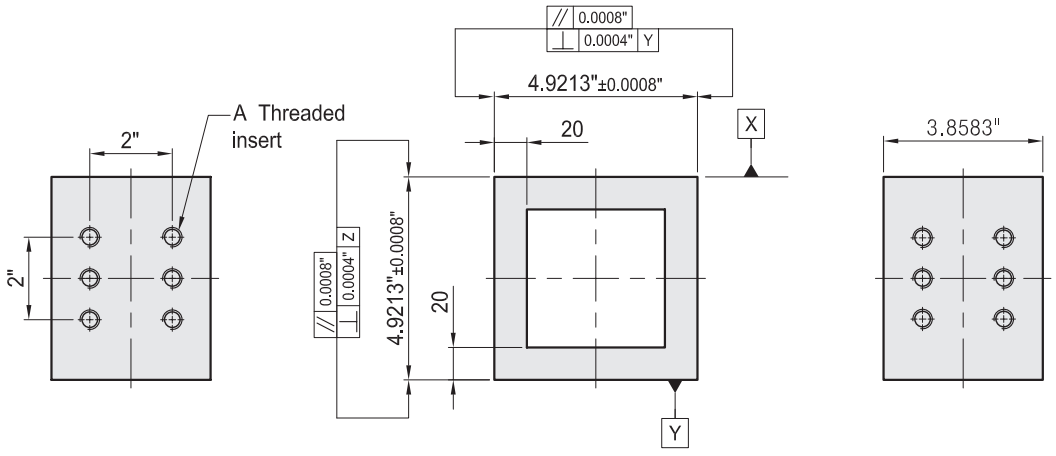


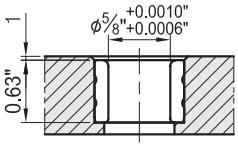


Figure C

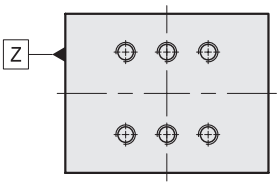


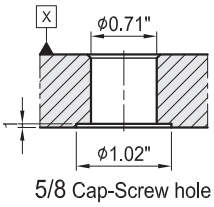


Figure B

PLEASE NOTE THESE NUMBERS ARE ROUNDED. THIS CHART IS FOR REFERENCE ONLY.
PLEASE CONSULT CAD MODELS FOR EXACT DEMENSIONS AT WWW.TOMBSTONECITY.COM

| MODEL NO. | A" | B" | C" | lb |
|---|---|---|---|---|
| BP28-125098-125-4 | 1/2-13UNC | 1/2-13UNC | 1/2 | 13 |
| BP28-125098-125-5 | 5/8-11UNC | 5/8-11UNC | 5/8 | 12 |

# BP29

## CROSS TOOLING COLUMN

- Material: Cast Iron FC300(JIS) / Class 45 Equivalent
- Heat treated (Normalized)
- Features: Ready to accept a hole pattern for your special jig.
- Eye bolt & top cover included.
- Special design welcome.

**Tombstones are designed to fit both inch & MM pallets.**

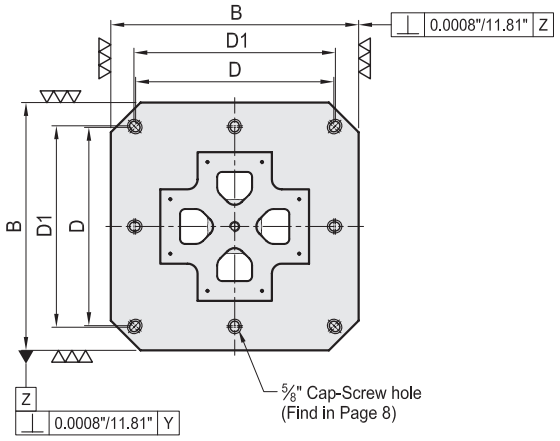


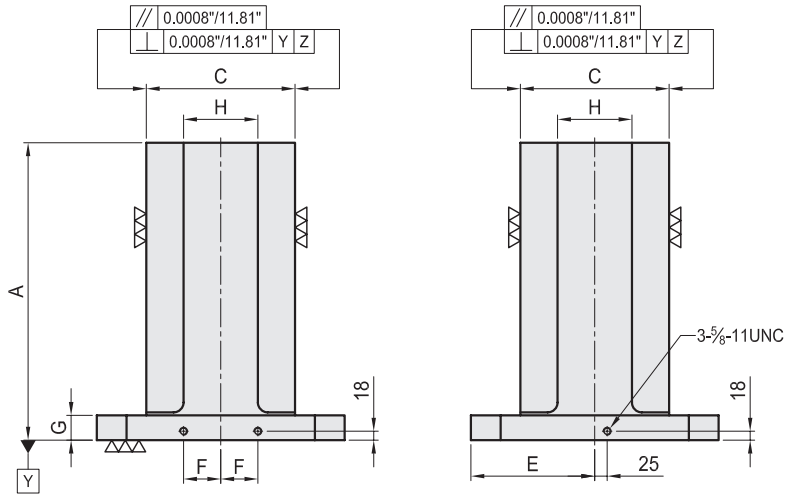


PLEASE NOTE THESE NUMBERS ARE ROUNDED. THIS CHART IS FOR REFERENCE ONLY.
PLEASE CONSULT CAD MODELS FOR EXACT DEMENSIONS AT WWW.TOMBSTONECITY.COM

| MODEL NO. | A" | B | | C" | D | D1" | E" | F | G" | H" | Mounting holes | lb |
|---|---|---|---|---|---|---|---|---|---|---|---|---|
| BP29-400400-0500 | 19.69 | 400 | 15.75" | 9.84 | 320 | 11.81 | 7.87 | 55 | 1.97 | 4.92 | 4 | 340 |
| BP29-400400-0650 | 25.59 | | | | | | | | | | | 415 |
| BP29-500500-0600 | 23.62 | 500 | 19.69" | 11.81 | 400 | 16.00 | 9.84 | 75 | 1.97 | 5.91 | 8 | 538 |
| BP29-500500-0750 | 29.53 | | | | | | | | | | | 633 |
| BP29-630630-0700 | 27.56 | 630 | 24.80" | 13.78 | 500 | 20.00 | 12.40 | 100 | 1.97 | 7.87 | 8 | 822 |
| BP29-630630-0850 | 33.46 | | | | | | | | | | | 935 |
| BP29-800800-0800 | 31.50 | 800 | 31.50" | 19.69 | 640 | 25.00 | 15.75 | 135 | 1.97 | 11.81 | 8 | 1429 |
| BP29-800800-1000 | 39.37 | | | | | | | | | | | 1660 |

*Easily configured to meet your special needs.

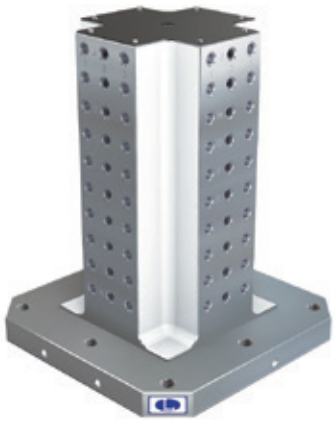

# BP30

## CROSS TOOLING COLUMN

- Material: Cast Iron FC300 (JIS) / Class 45 Equivalent
- Heat treated (Normalized)
- Alignment bushing: Steel Heat Treated HRC~60°
- Threaded Insert: Steel Heat Treated HRC~32°
- MTP hole spacing: 2"±0.0008"
- Features: Alignment bushing & thread insert at every hole location, easily adapts to standardized jig components.
- Eye bolt & top cover included.
- Special design welcome.

**Tombstones are designed to fit both inch & MM pallets.**

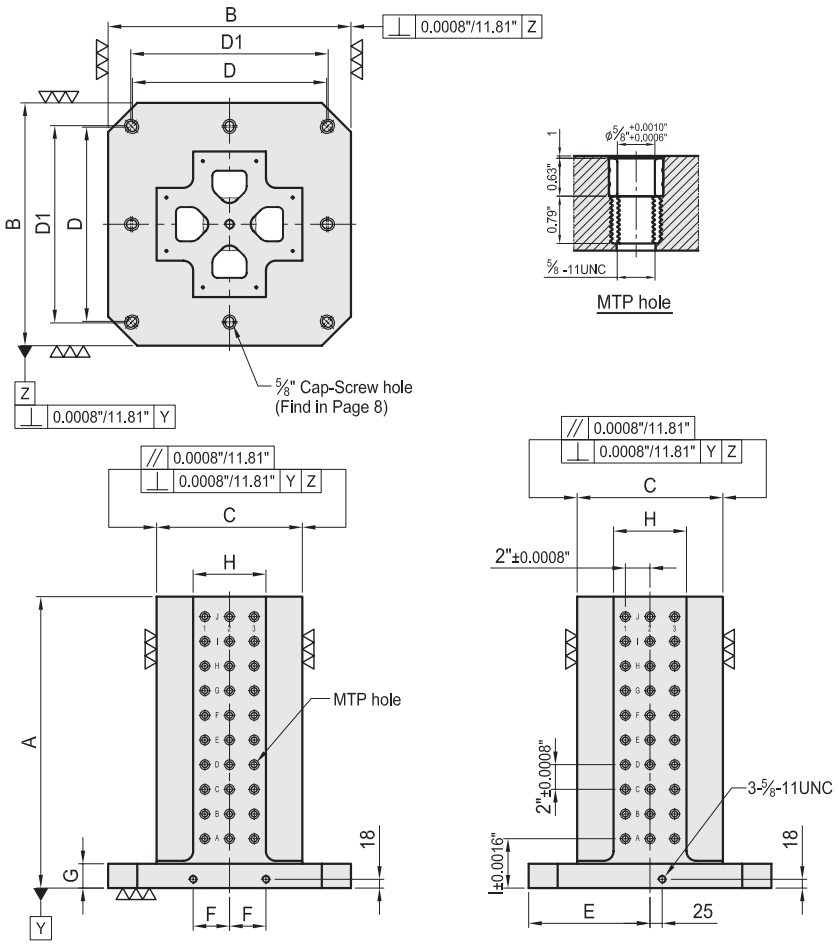


PLEASE NOTE THESE NUMBERS ARE ROUNDED. THIS CHART IS FOR REFERENCE ONLY.
PLEASE CONSULT CAD MODELS FOR EXACT DEMENSIONS AT WWW.TOMBSTONECITY.COM

| MODEL NO. | A" | B | | C" | D | D1" | E" | F | G" | H" | I" | MTP | Mounting holes | lb |
|---|---|---|---|---|---|---|---|---|---|---|---|---|---|---|
| BP30-400400-0500-5 | 19.69 | 400 | 15.75" | 9.84 | 320 | 11.81 | 7.87 | 55 | 1.97 | 4.92 | 4 | 64 | 4 | 333 |
| BP30-400400-0650-5 | 25.59 | | | | | | | | | | | 88 | | 406 |
| BP30-500500-0600-5 | 23.62 | 500 | 19.69" | 11.81 | 400 | 16.00 | 9.84 | 75 | 1.97 | 5.91 | 4 | 120 | 8 | 545 |
| BP30-500500-0750-5 | 29.53 | | | | | | | | | | | 156 | | 639 |
| BP30-630630-0700-5 | 27.56 | 630 | 24.80" | 13.78 | 500 | 20.00 | 12.40 | 100 | 1.97 | 7.87 | 4 | 192 | 8 | 803 |
| BP30-630630-0850-5 | 33.46 | | | | | | | | | | | 240 | | 911 |
| BP30-800800-0800-5 | 31.50 | 800 | 31.50" | 19.69 | 640 | 25.00 | 15.75 | 135 | 1.97 | 11.81 | 5 | 312 | 8 | 1396 |
| BP30-800800-1000-5 | 39.37 | | | | | | | | | | | 408 | | 1616 |

*Easily configured to meet your special needs.

*Tombstones in stock have 5/8" mtp holes.Can be special ordered with 1/2" or metric mtp holes"

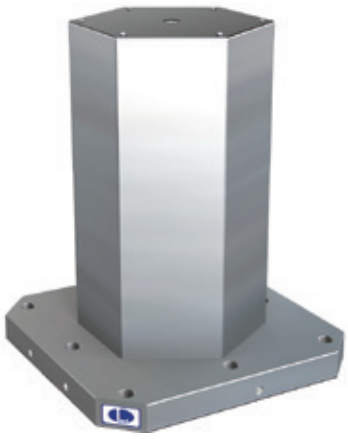

# BP31

## HEXAGONAL CUBE

- Material: Cast Iron FC300(JIS) / Class 45 Equivalent
- Heat treated (Normalized)
- Features: Ready to accept a hole pattern for your special jig.
- Eye bolt & top cover included.
- Special design welcome.

**Tombstones are designed to fit both inch & MM pallets.**

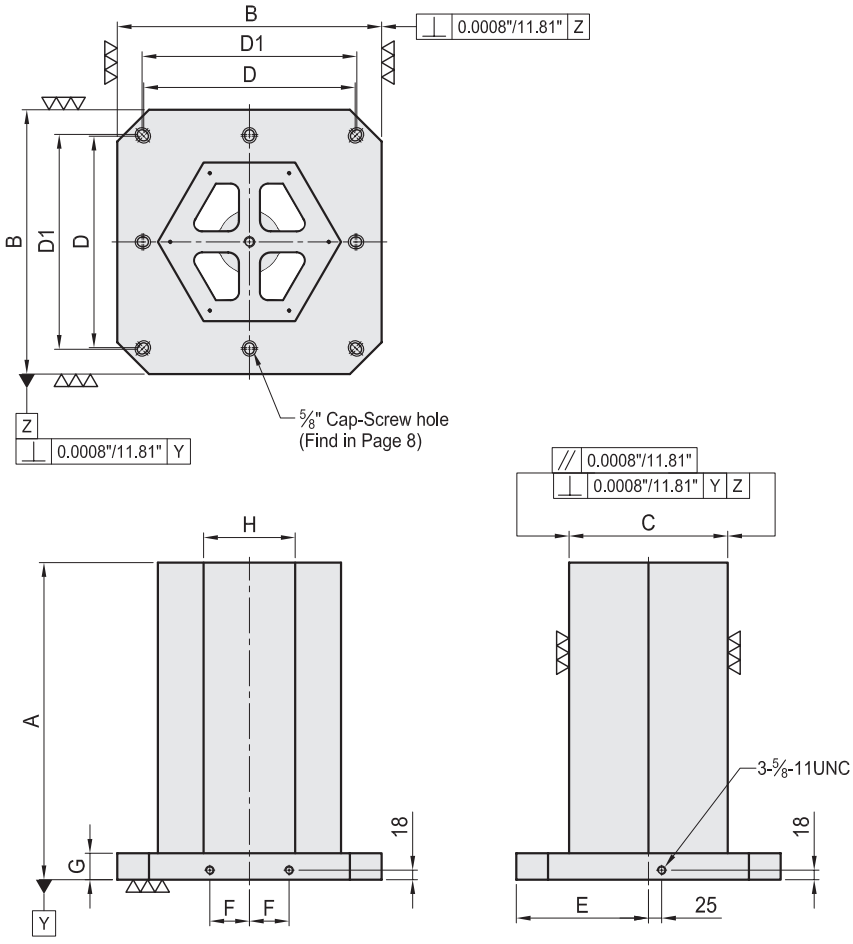


PLEASE NOTE THESE NUMBERS ARE ROUNDED. THIS CHART IS FOR REFERENCE ONLY.
PLEASE CONSULT CAD MODELS FOR EXACT DEMENSIONS AT WWW.TOMBSTONECITY.COM

| MODEL NO. | A" | B | | C" | D | D1" | E" | F | G" | H" | Mounting holes | lb |
|---|---|---|---|---|---|---|---|---|---|---|---|---|
| BP31-400400-0500 | 19.69 | 400 | 15.75" | 9.84 | 320 | 11.81 | 7.87 | 55 | 1.97 | 5.68 | 4 | 333 |
| BP31-400400-0650 | 25.59 | | | | | | | | | | | 404 |
| BP31-500500-0600 | 23.62 | 500 | 19.69" | 11.81 | 400 | 16.00 | 9.84 | 75 | 1.97 | 6.82 | 8 | 514 |
| BP31-500500-0750 | 29.53 | | | | | | | | | | | 600 |
| BP31-630630-0700 | 27.56 | 630 | 24.80" | 13.78 | 500 | 20.00 | 12.40 | 100 | 1.97 | 7.96 | 8 | 796 |
| BP31-630630-0850 | 33.46 | | | | | | | | | | | 900 |
| BP31-800800-0800 | 31.50 | 800 | 31.50" | 19.69 | 640 | 25.00 | 15.75 | 135 | 1.97 | 11.37 | 8 | 1365 |
| BP31-800800-1000 | 39.37 | | | | | | | | | | | 1572 |

*Easily configured to meet your special needs.

# BP32

## HEXAGONAL CUBE

- Material: Cast Iron FC300 (JIS) / Class 45 Equivalent
- Heat treated (Normalized)
- Alignment bushing: Steel Heat Treated HRC~60°
- Threaded Insert: Steel Heat Treated HRC~32°
- MTP hole spacing: 2"±0.0008"
- Features: Alignment bushing & thread insert at every hole location, easily adapts to standardized jig components.
- Eye bolt & top cover included.
- Special design welcome.

**Tombstones are designed to fit both inch & MM pallets.**

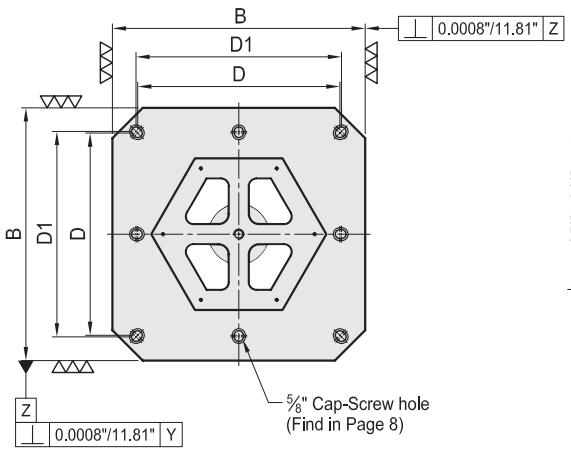


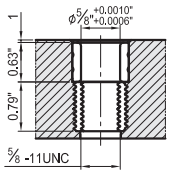


MTP hole

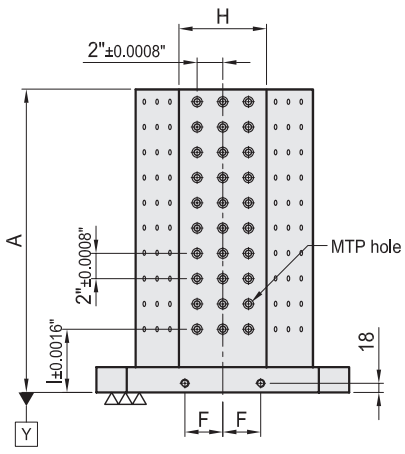


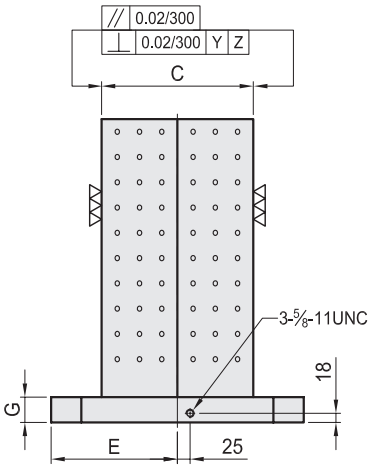


PLEASE NOTE THESE NUMBERS ARE ROUNDED. THIS CHART IS FOR REFERENCE ONLY.
PLEASE CONSULT CAD MODELS FOR EXACT DEMENSIONS AT WWW.TOMBSTONECITY.COM

| MODEL NO. | A" | B | | C" | D | D1" | E" | F | G" | H" | I" | MTP | Mounting holes | lb |
|---|---|---|---|---|---|---|---|---|---|---|---|---|---|---|
| BP32-400400-0500-5 | 19.69 | 400 | 15.75" | 9.84 | 320 | 11.81 | 7.87 | 55 | 1.97 | 5.68 | 4 | 96 | 4 | 324 |
| BP32-400400-0650-5 | 25.59 | | | | | | | | | | | 132 | | 390 |
| BP32-500500-0600-5 | 23.62 | 500 | 19.69" | 11.81 | 400 | 16.00 | 9.84 | 75 | 1.97 | 6.82 | 4 | 180 | 8 | 494 |
| BP32-500500-0750-5 | 29.53 | | | | | | | | | | | 234 | | 578 |
| BP32-630630-0700-5 | 27.56 | 630 | 24.80" | 13.78 | 500 | 20.00 | 12.40 | 100 | 1.97 | 7.96 | 4 | 216 | 8 | 774 |
| BP32-630630-0850-5 | 33.46 | | | | | | | | | | | 270 | | 873 |
| BP32-800800-0800-5 | 31.50 | 800 | 31.50" | 19.69 | 640 | 25.00 | 15.75 | 135 | 1.97 | 11.37 | 5 | 390 | 8 | 1323 |
| BP32-800800-1000-5 | 39.37 | | | | | | | | | | | 510 | | 1517 |

*Easily configured to meet your special needs.
*Tombstones in stock have 5/8" mtp holes.Can be special ordered with 1/2" or metric mtp holes"

# BP33

## OCTAGONAL CUBE

- Material: Cast Iron FC300(JIS) / Class 45 Equivalent
- Heat treated (Normalized)
- Features: Ready to accept a hole pattern for your special jig.
- Eye bolt & top cover included.
- Special design welcome.

**Tombstones are designed to fit both inch & MM pallets.**

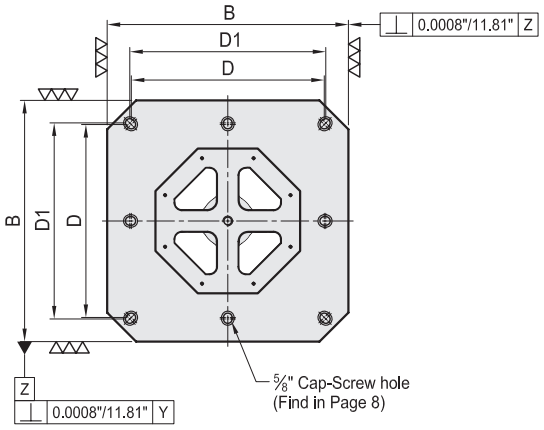


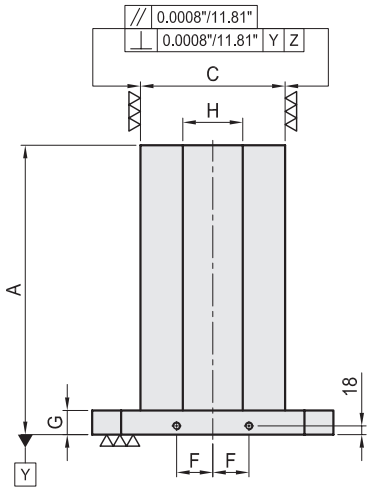


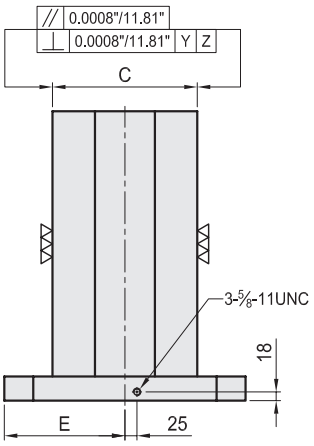


PLEASE NOTE THESE NUMBERS ARE ROUNDED. THIS CHART IS FOR REFERENCE ONLY.
PLEASE CONSULT CAD MODELS FOR EXACT DEMENSIONS AT WWW.TOMBSTONECITY.COM

| MODEL NO. | A" | B | | C" | D | D1" | E" | F | G" | H" | Mounting holes | lb |
|---|---|---|---|---|---|---|---|---|---|---|---|---|
| BP33-400400-0500 | 19.69 | 400 | 15.75" | 9.84 | 320 | 11.81 | 7.87 | 55 | 1.97 | 4.06 | 4 | 326 |
| BP33-400400-0650 | 25.59 | | | | | | | | | | | 395 |
| BP33-500500-0600 | 23.62 | 500 | 19.69" | 11.81 | 400 | 16.00 | 9.84 | 75 | 1.97 | 4.88 | 8 | 501 |
| BP33-500500-0750 | 29.53 | | | | | | | | | | | 582 |
| BP33-630630-0700 | 27.56 | 630 | 24.80" | 13.78 | 500 | 20.00 | 12.40 | 100 | 1.97 | 5.71 | 8 | 772 |
| BP33-630630-0850 | 33.46 | | | | | | | | | | | 871 |
| BP33-800800-0800 | 31.50 | 800 | 31.50" | 19.69 | 640 | 25.00 | 15.75 | 135 | 1.97 | 8.15 | 8 | 1372 |
| BP33-800800-1000 | 39.37 | | | | | | | | | | | 1568 |

*Easily configured to meet your special needs.

# BP34

## OCTAGONAL CUBE

- Material: Cast Iron FC300 (JIS) / Class 45 Equivalent
- Heat treated (Normalized)
- Alignment bushing: Steel Heat Treated HRC~60°
- Threaded Insert: Steel Heat Treated HRC~32°
- MTP hole spacing: 2"±0.0008"
- Features: Alignment bushing & thread insert at every hole location, easily adapts to standardized jig components.
- Eye bolt & top cover included.
- Special design welcome.

**Tombstones are designed to fit both inch & MM pallets.**

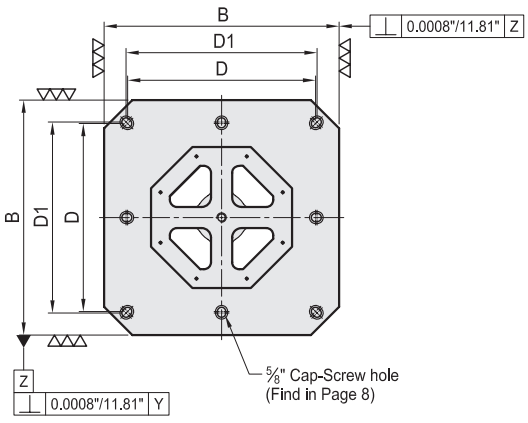


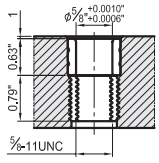


MTP hole

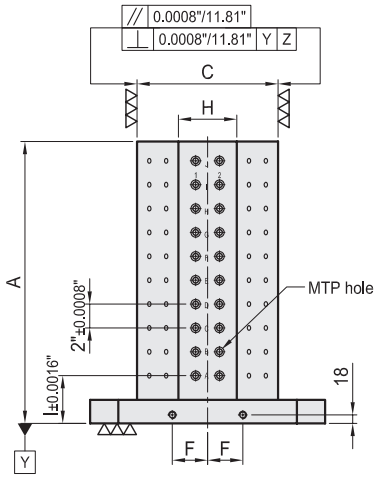


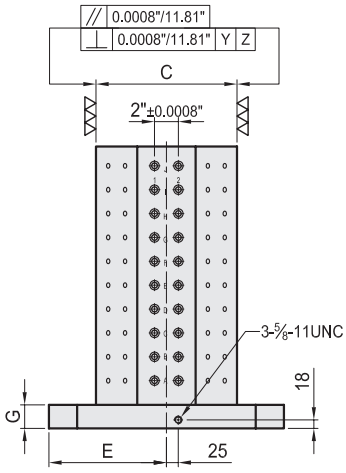


PLEASE NOTE THESE NUMBERS ARE ROUNDED. THIS CHART IS FOR REFERENCE ONLY.
PLEASE CONSULT CAD MODELS FOR EXACT DEMENSIONS AT WWW.TOMBSTONECITY.COM

| MODEL NO. | A" | B | | C" | D | D1" | E" | F | G" | H" | I" | MTP | Mounting holes | lb |
|---|---|---|---|---|---|---|---|---|---|---|---|---|---|---|
| BP34-400400-0500-5 | 19.69 | 400 | 15.75" | 9.84 | 320 | 11.81 | 7.87 | 55 | 1.97 | 4.06 | 4 | 128 | 4 | 313 |
| BP34-400400-0650-5 | 25.59 | | | | | | | | | | | 176 | | 377 |
| BP34-500500-0600-5 | 23.62 | 500 | 19.69" | 11.81 | 400 | 16.00 | 9.84 | 75 | 1.97 | 4.88 | 4 | 160 | 8 | 483 |
| BP34-500500-0750-5 | 29.53 | | | | | | | | | | | 208 | | 562 |
| BP34-630630-0700-5 | 27.56 | 630 | 24.80" | 13.78 | 500 | 20.00 | 12.40 | 100 | 1.97 | 5.71 | 4 | 192 | 8 | 752 |
| BP34-630630-0850-5 | 33.46 | | | | | | | | | | | 240 | | 847 |
| BP34-800800-0800-5 | 31.50 | 800 | 31.50" | 19.69 | 640 | 25.00 | 15.75 | 135 | 1.97 | 8.15 | 5 | 416 | 8 | 1325 |
| BP34-800800-1000-5 | 39.37 | | | | | | | | | | | 544 | | 1510 |

*Easily configured to meet your special needs.
*Tombstones in stock have 5/8" mtp holes.Can be special ordered with 1/2" or metric mtp holes"

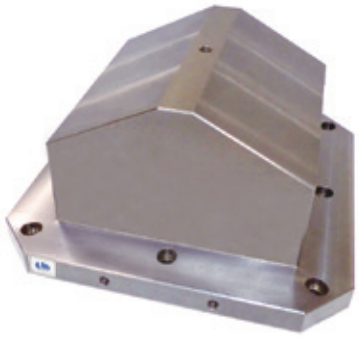

# BP38

## 5AXIS TOOLING COLUMN

- Material: Cast Iron FC300(JIS) / GG30(DIN)
- Heat treated (Normalized)
- Application: HMC / VMC
- Features: Ready to accept a hole pattern for your special jig.

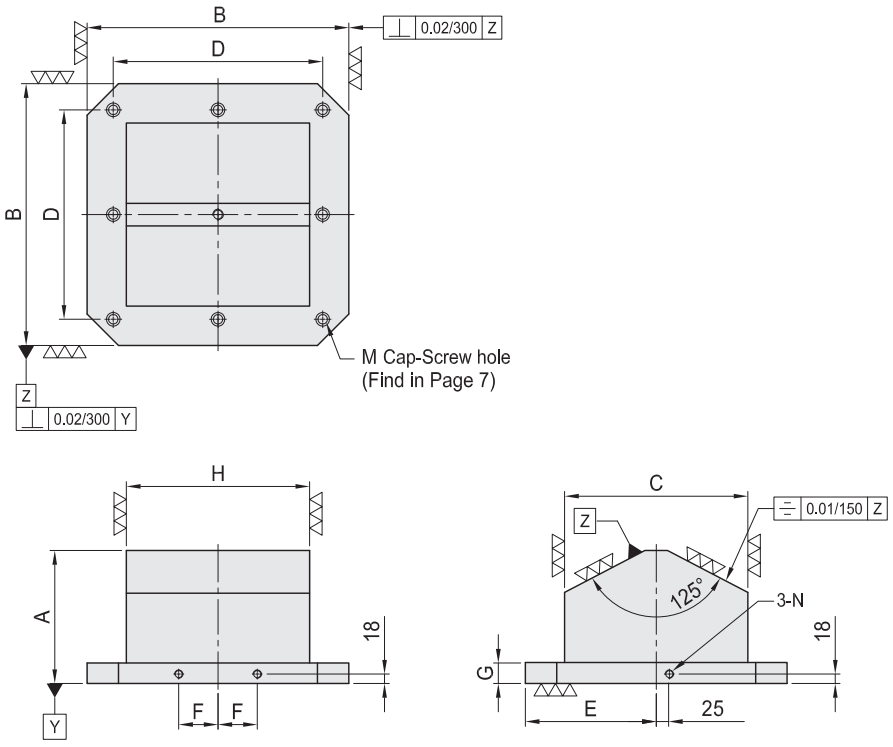


| MODEL NO. | A" | B | | C" | D | D1" | E | F | G" | H" | M" | N" | Mounting holes | lb |
|---|---|---|---|---|---|---|---|---|---|---|---|---|---|---|
| BP38-500500-0254 | 10.0 | 500 | 19.69" | 13.7 | 400 | 16.00 | 250 | 75 | 1.57 | 13.7 | 5/8 | 5/8 | 8 | 317 |
| BP38-630630-0292 | 11.5 | 630 | 24.80" | 17.7 | 500 | 20.00 | 315 | 100 | 1.97 | 17.7 | 5/8 | 5/8 | 8 | 540 |

*Special Design Welcome !

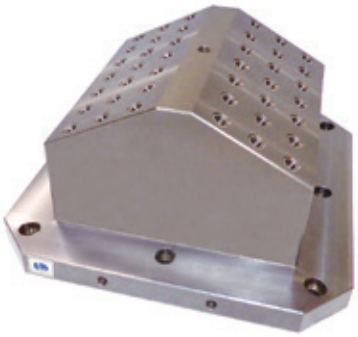

# BP39

## 5AXIS TOOLING COLUMN

- Material: Cast Iron FC300(JIS) / GG30(DIN)
- Heat treated (Normalized)
- Application: HMC / VMC
- Features: Ready to accept a hole pattern for your special jig.

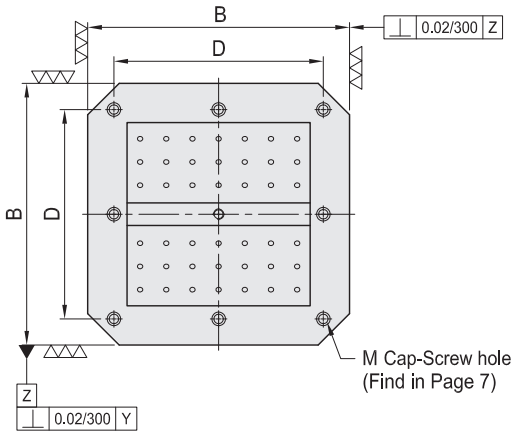


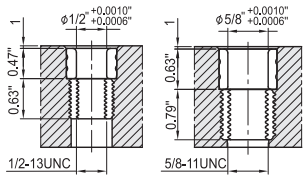


MTP hole

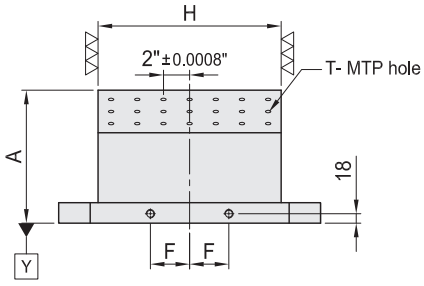


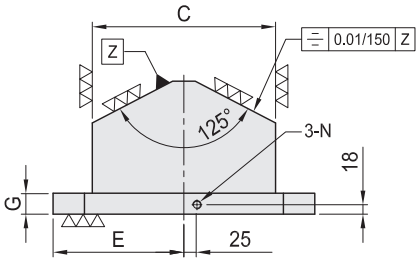


| MODEL NO. | A" | B | | C" | D | D1" | E" | F | G" | H" | M" | N" | MTP | Mounting holes | lb |
|---|---|---|---|---|---|---|---|---|---|---|---|---|---|---|---|
| BP39-500500-0254-4 | 10.0 | 500 | 19.69" | 13.7 | 400 | 16.00 | 9.84 | 75 | 1.57 | 13.7 | 1/2 | 5/8 | 42 | 8 | 317 |
| BP39-630630-0292-4 | 11.5 | 630 | | 17.7 | 500 | | 12.40 | 100 | 1.97 | 17.7 | 1/2 | 5/8 | 72 | 8 | 539 |
| BP39-500500-0254-5 | 10.0 | 500 | 24.80" | 13.7 | 400 | 20.00 | 9.84 | 75 | 1.57 | 13.7 | 5/8 | 5/8 | 45 | 8 | 317 |
| BP39-630630-0292-5 | 11.5 | 630 | | 17.7 | 500 | | 12.40 | 100 | 1.97 | 17.7 | 5/8 | 5/8 | 72 | 8 | 539 |

*Special Design Welcome !

# BP40

## HEAVY DUTY V BLOCK

FC30 Cast iron - Normalized
Hardened tool inserts in the V
2 way alignment key ways for easy set up
Top clamps,studs & nuts - included
Chain clamping system for heavy duty work - included

### BP40-A1

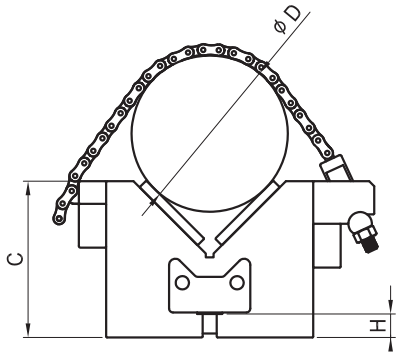


### BP40-A2

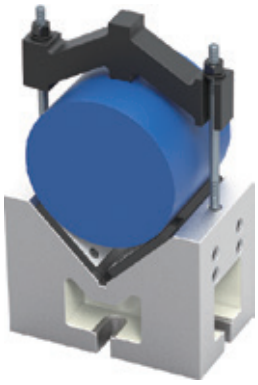

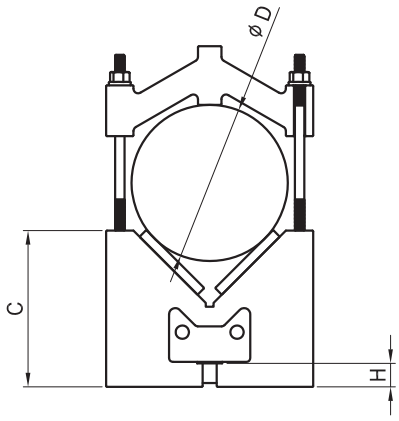


### BP40-A3

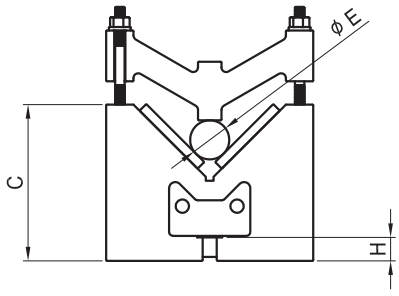


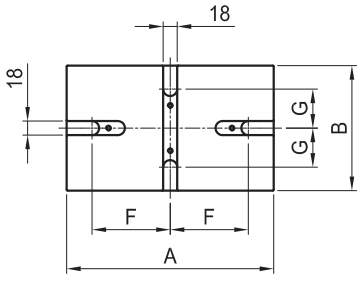


See website for full specifications

| MODEL NO. | A" | B" | C" | D" | E" | F" | G" | H" | lb |
|---|---|---|---|---|---|---|---|---|---|
| BP40-V215 | 8.46 | 5.11 | 6.1 | 5.9 | 1.18 | 2.95 | 1.96 | 0.78 | 73 |
| BP40-V265 | 10.43 | 6.29 | 7.87 | 7.87 | 1.18 | 3.93 | 1.96 | 1.18 | 121 |
| BP40-V320 | 12.59 | 7.87 | 9.25 | 9.84 | 1.18 | 4.92 | 2.95 | 1.18 | 192 |

These numbers are rounded. This chart is for reference only. Please consult the cad drawings for exact dimensions.

# BP-SPECIAL

## WE CAN BUILD YOUR OWN SPECIAL DESIGN
## NO SIZE LIMITATION

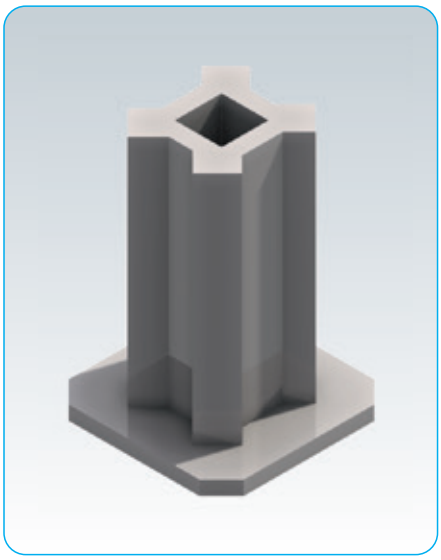
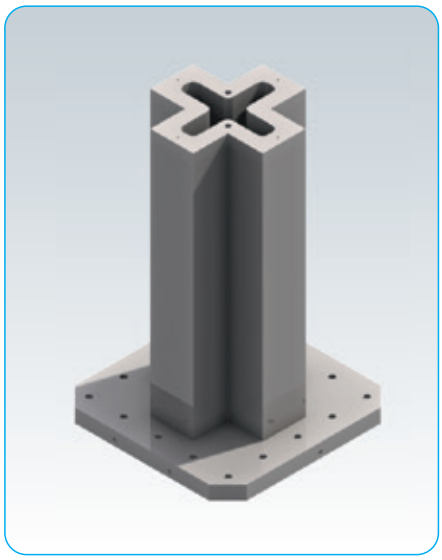

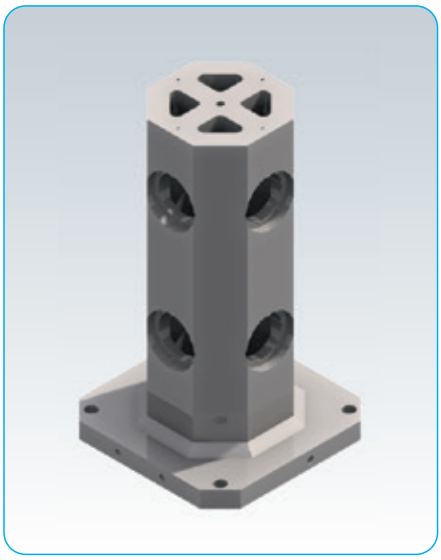
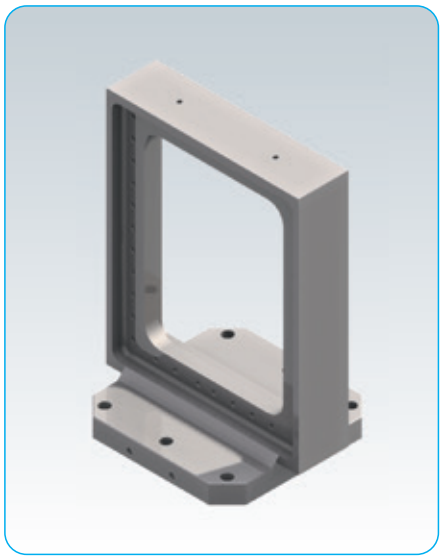
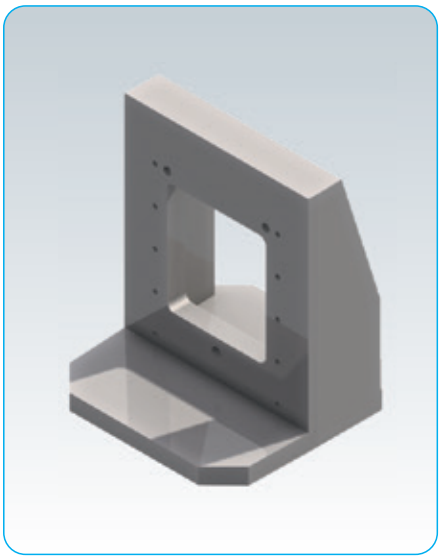

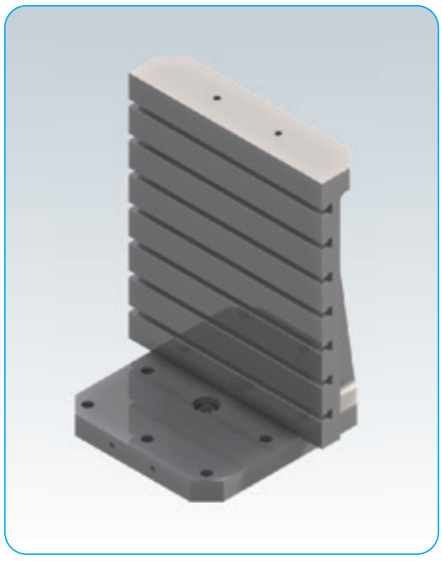
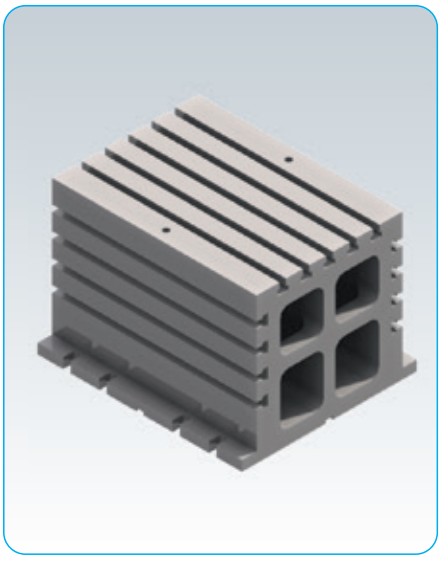

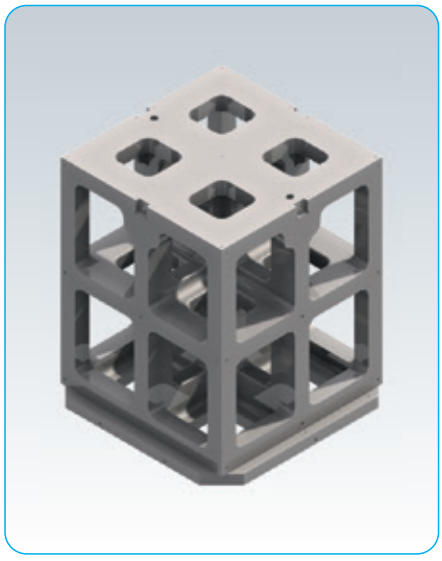

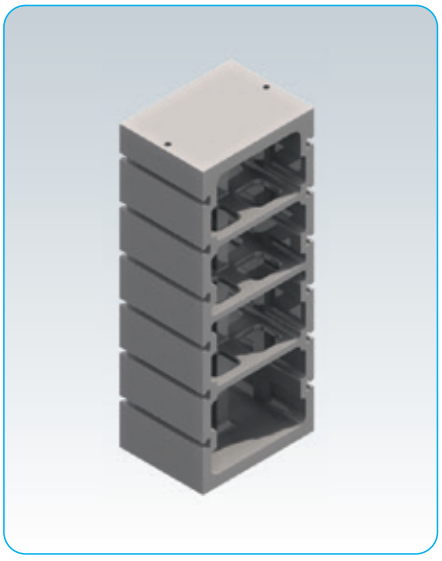

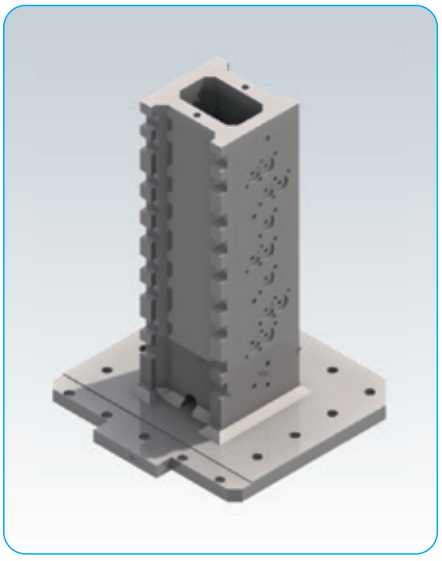

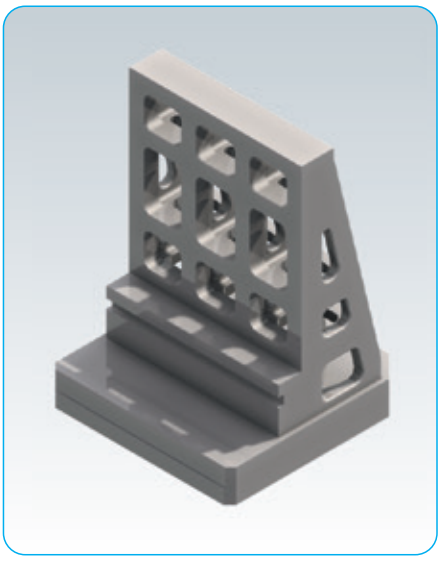

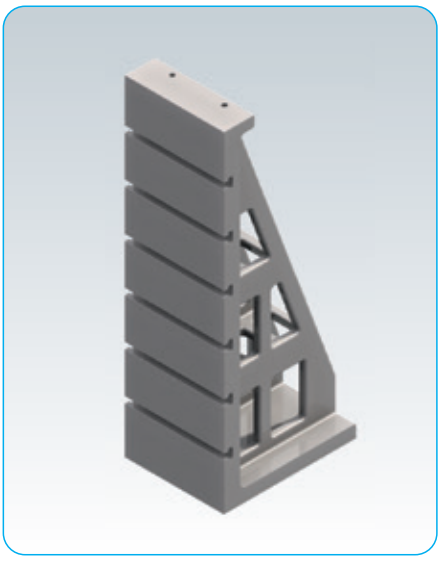

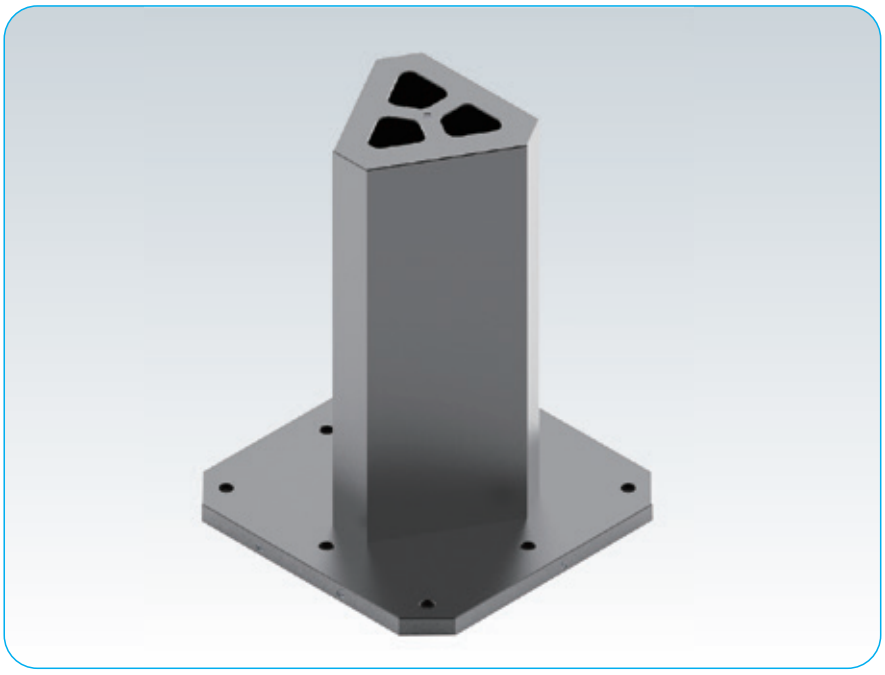

# CP11

## FREE JAW VISE

- Material：FCD45 high strength cast iron
- Heat treated：Nnormalized.
- Application：Ideal for holding large or irregullar shapes.
- Features：Clamping force in 2 direcciors, available with plain or serrated jaws.

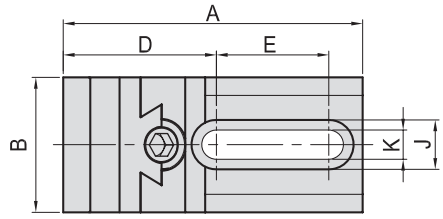


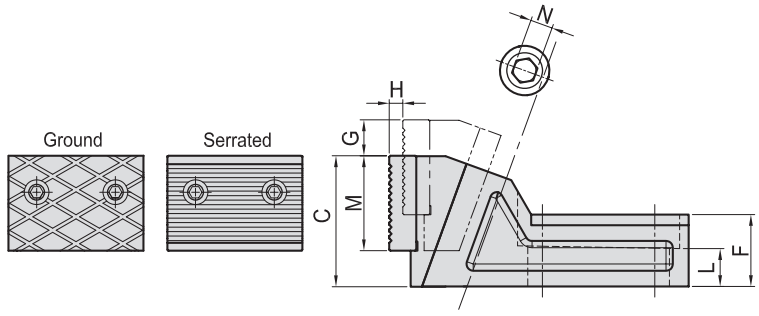


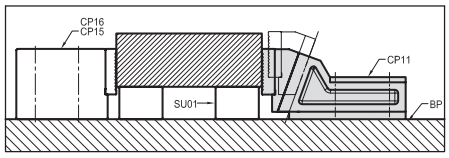


| MODEL NO. | A" | B" | C" | D" | E" | F" | G" | H" | J" | K" | L" | M" | N | Type | lb |
|---|---|---|---|---|---|---|---|---|---|---|---|---|---|---|---|
| CP11-1260-G | 5.24 | 2.36 | 2.28 | 2.68 | 1.97 | 1.26 | 0.63 | 0.24 | 0.87 | 0.51 | 0.66 | 1.65 | 10 | Ground | 4.62 |
| CP11-1685-G | 7.36 | 3.35 | 3.15 | 3.62 | 2.76 | 1.97 | 0.94 | 0.35 | 1.18 | 0.67 | 0.92 | 2.36 | 14 | | 12.32 |
| CP11-1260-S | 5.24 | 2.36 | 2.28 | 2.68 | 1.97 | 1.26 | 0.63 | 0.24 | 0.87 | 0.51 | 0.66 | 1.65 | 10 | Serrated | 4.62 |
| CP11-1685-S | 7.36 | 3.35 | 3.15 | 3.62 | 2.76 | 1.97 | 0.94 | 0.35 | 1.18 | 0.67 | 0.92 | 2.36 | 14 | | 12.32 |

# CP23

## FREE JAW VISE-Sold in sets of 2

- Material:FCD45 higt strength cast iron Finish:Black oxide.
- Application:Ideal for holding large or irregular shapes.
- Features:Clamping force in 2 directions.

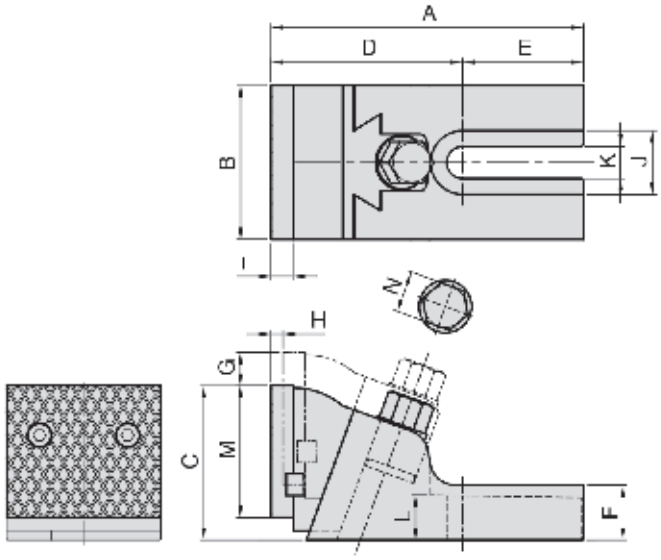


| MODEL NO. | A" | B" | C" | D" | E" | F" | G" | H" | J" | K" | L" | M" | N | lb |
|---|---|---|---|---|---|---|---|---|---|---|---|---|---|---|
| CP23-12140 | 5.59 | 2.76 | 2.76 | 4.06 | 2.17 | 0.98 | 0.55 | 0.20 | 0.39 | 1.14 | 0.81 | 2.36 | 19 | 13.86 |
| CP23-16195 | 7.56 | 3.35 | 3.35 | 4.06 | 3.46 | 1.18 | 0.59 | 0.20 | 0.47 | 1.46 | 0.94 | 2.76 | 24 | 24.2 |
| CP23-20220 | 8.66 | 4.09 | 4.09 | 4.72 | 3.94 | 1.42 | 0.79 | 0.28 | 0.51 | 1.65 | 1.10 | 3.35 | 30 | 46.2 |

# AUX PARTS

*PT31,PT34,PT43,PT44,PT60,PT61*

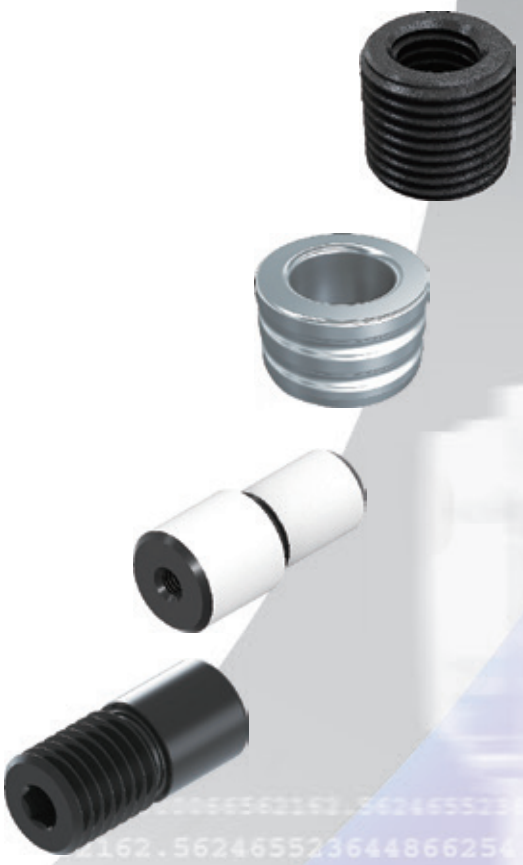

SMOOTH BALL END BOLT SERRATED BALL END BOLT KNURLED NUT FLANGE NUT EXTENSION NUT

# PT31

## GROUND SHOULDER BOLT

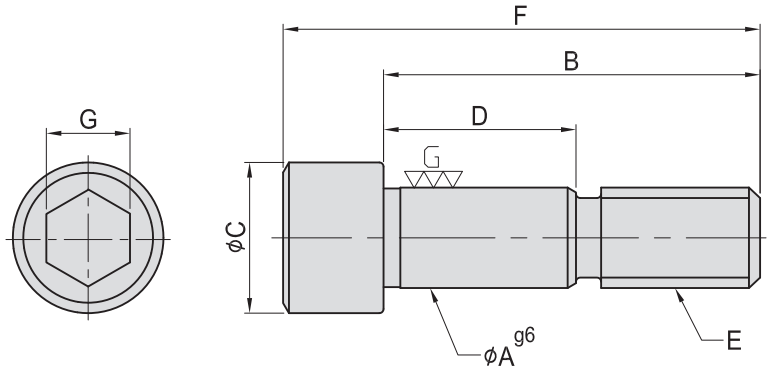


- Material：SCM435(JIS)/34CrMo4(DIN)
- Heat treated：HRC 32°~38°

| MODEL NO. | A" | B | C | D | E" | F | G | kg |
|---|---|---|---|---|---|---|---|---|
| PT31-0555 | 5/8 | 55 | 24 | 28 | 5/8"-11 | 72 | 14 | 0.120 |
| PT31-0565 | | 65 | | 40 | | 82 | | 0.140 |
| PT31-0575 | | 75 | | 50 | | 92 | | 0.150 |

# PT34

## MTP HOLE PROTECTION PLUG

### Steel-Black oxide finish

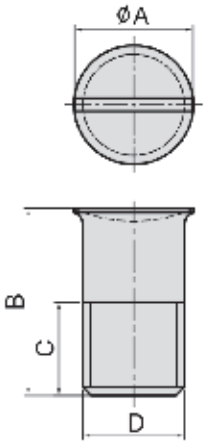


| MODEL NO. | A | B | C | D" | kg |
|---|---|---|---|---|---|
| PT34-03 | 10.5 | 19 | 10 | 3/8-16 | 0.015 |
| PT34-04 | 14.0 | 22 | 11 | 1/2-13 | 0.018 |
| PT34-05 | 17.8 | 25 | 13 | 5/8-11 | 0.035 |
| PT34-06 | 21.1 | 35 | 19 | 3/4-10 | 0.040 |

### Aluminum W / O-Ring

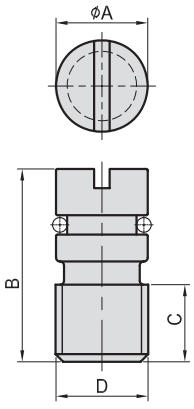


AL

| MODEL NO. | A | B | C | D | kg |
|---|---|---|---|---|---|
| PT34-04-AL | 12.60 | 25 | 10 | 1/2-13 | 0.007 |
| PT34-05-AL | 15.75 | 30 | 11 | 5/8-11 | 0.015 |

# PT43

## THREADED INSERT

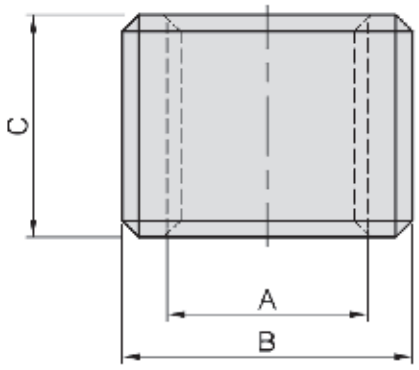


- Material：S45C(JIS)
- Heat treated：HRC 32°~35°
- Surface finish：Black Oxide.

| MODEL NO. | A" | B | C | kg |
|---|---|---|---|---|
| PT43-0418-16 | 1/2"-13 | M18x2 | 16 | 0.015 |
| PT43-0522-20 | 5/8"-11 | M22x2 | 20 | 0.025 |

# PT44

## POSITIONING BUSHING

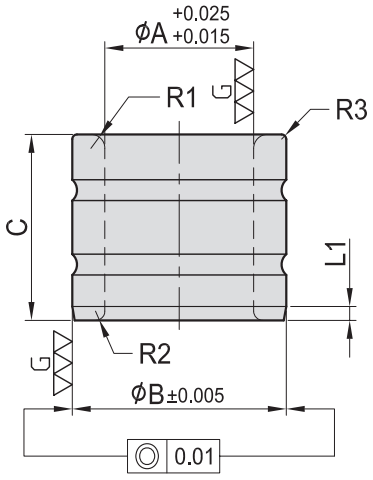


- Material：SUJ2(JIS)
- Heat treated：HRC 60°

| MODEL NO. | A" | B | C | R1 | R2 | R3 | L1 | kg |
|---|---|---|---|---|---|---|---|---|
| PT44-0420-12 | 1/2" | 20 | 12 | 1.5 | 1 | 0.5 | 1.5 | 0.017 |
| PT44-0523-16 | 5/8" | 23 | 16 | 1.5 | 1 | 0.5 | 1.5 | 0.025 |

# PT60

## STEP DOWEL PIN

MTP HOLE ADAPTERS Adapts 5/8” to 1/2”

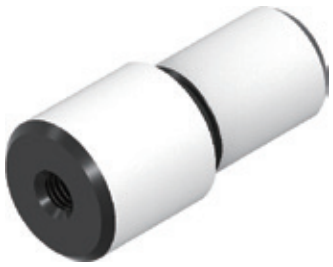

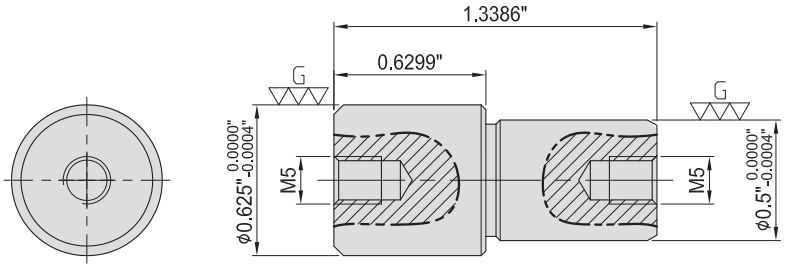


- Material：SCM440(JIS)
- Heat treated：HRC 45°

# PT61

## THREAD ADAPTER

MTP HOLE ADAPTERS Adapts 5/8” to 1/2”

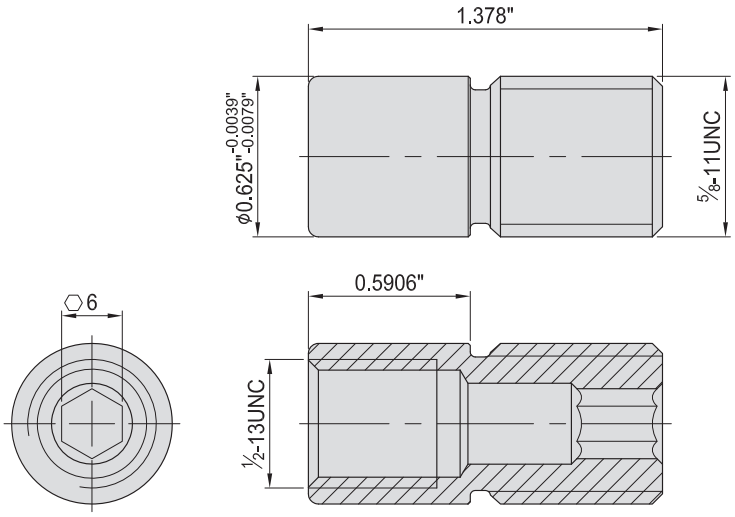


- Material：S45C(JIS)
- Heat treated：HRC 32°~35°
- Surface finish：Black Oxide.

# SVF MODULAR VISE SYSTEM

*SVF-A,B,BE,C, SVF-CB, SVFX*

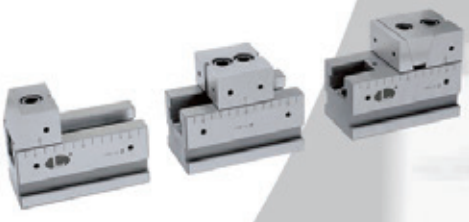

FLEXIBLE LINE UP VISE SERIES . M/C OCTAGONAL CUBE INDEXING TABLE

# SVF-A One Direction Clamping

## Clamping Examples

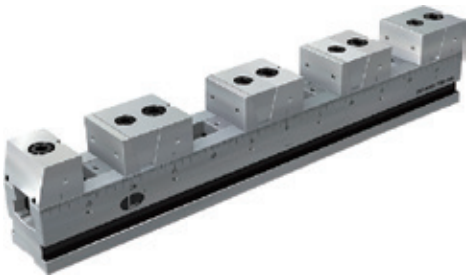

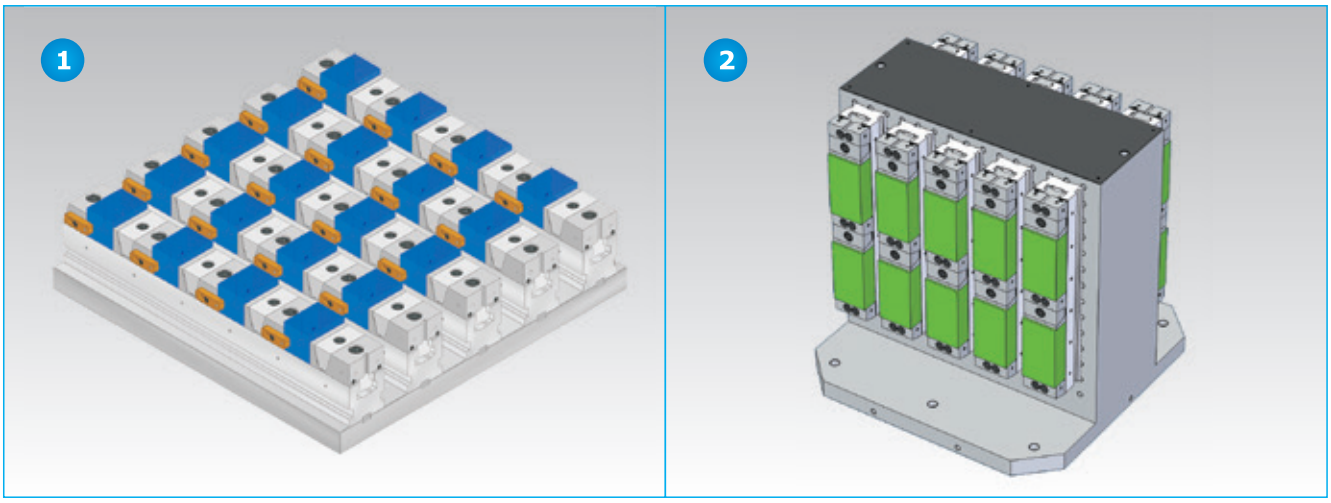


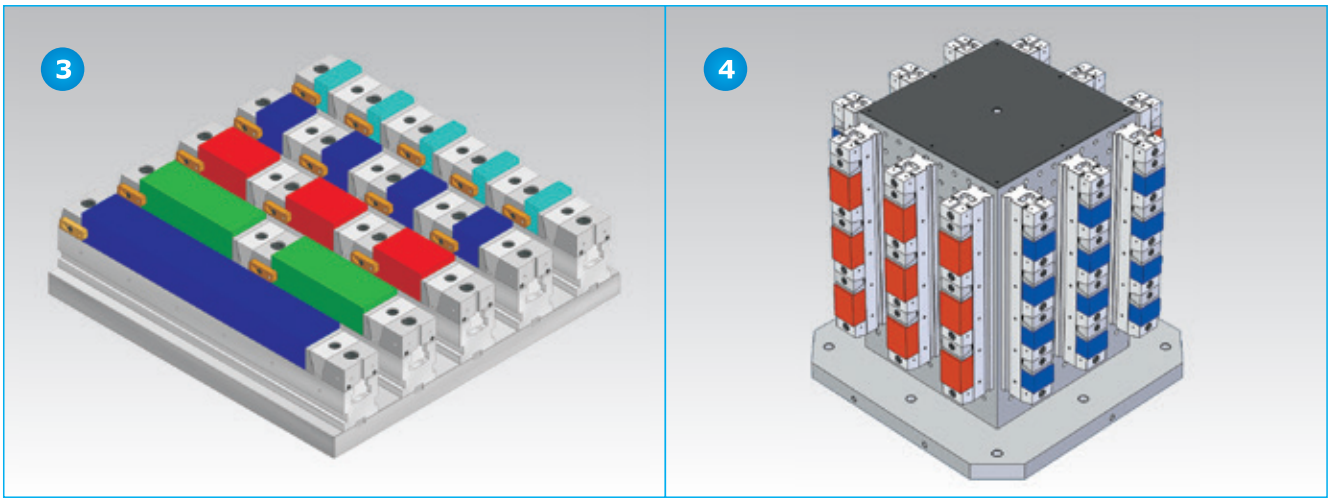


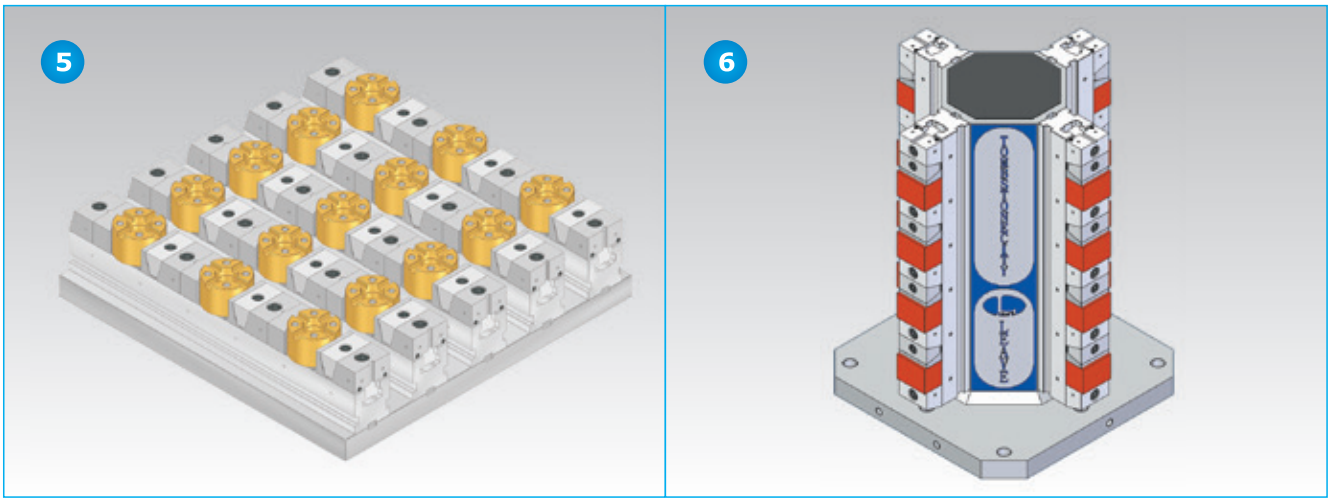

# SVF-B Bi-direction Clamping

## Clamping Examples

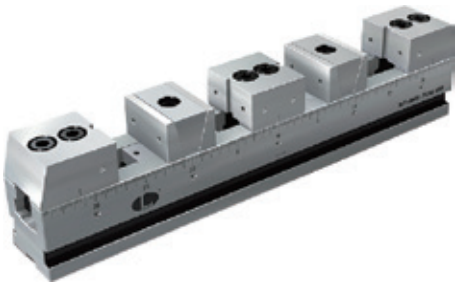

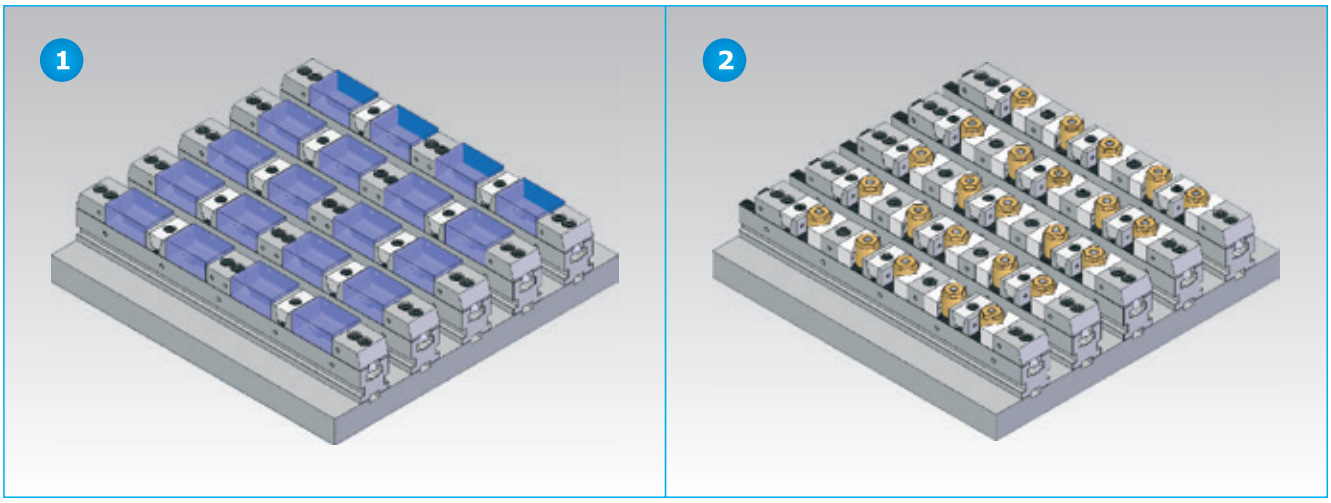


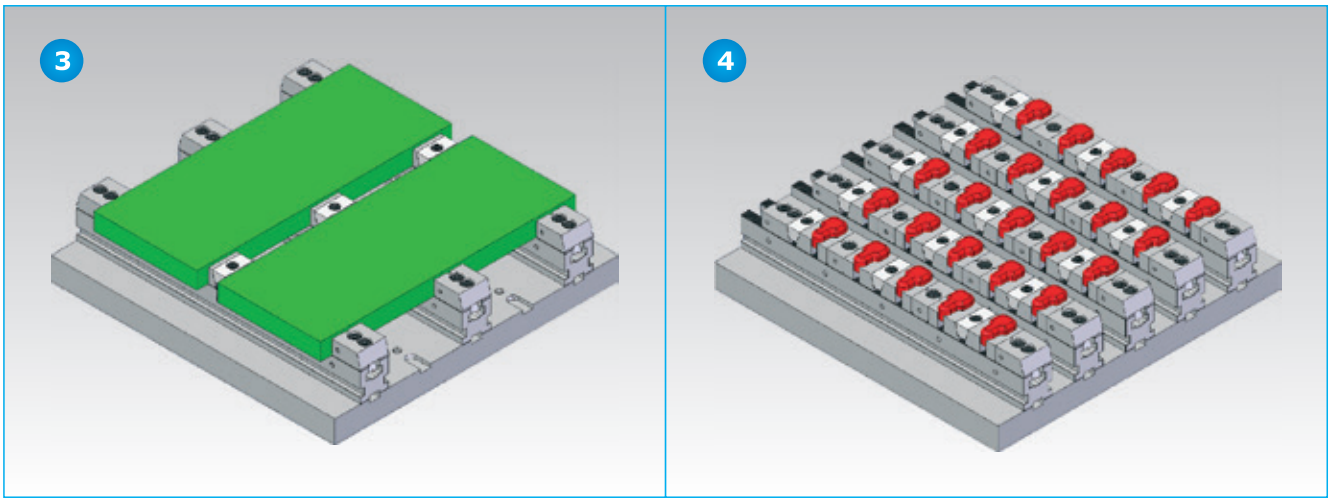

# SVF-BE Bi-direction Clamping

## Clamping Examples

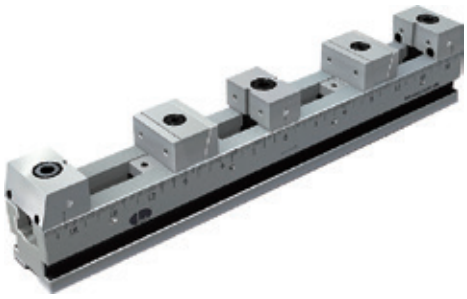

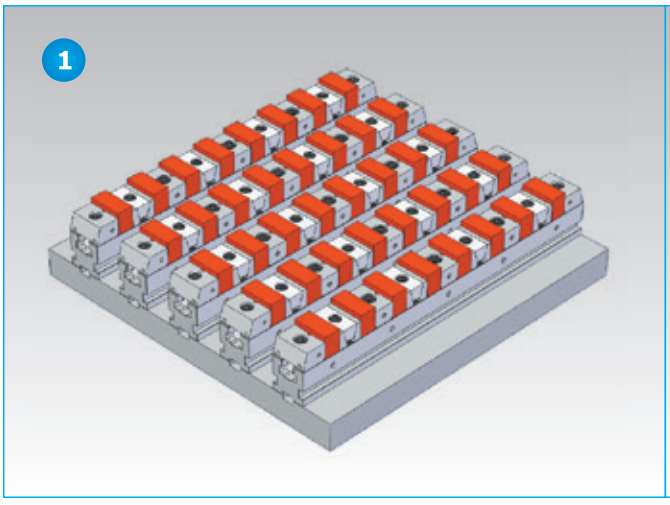


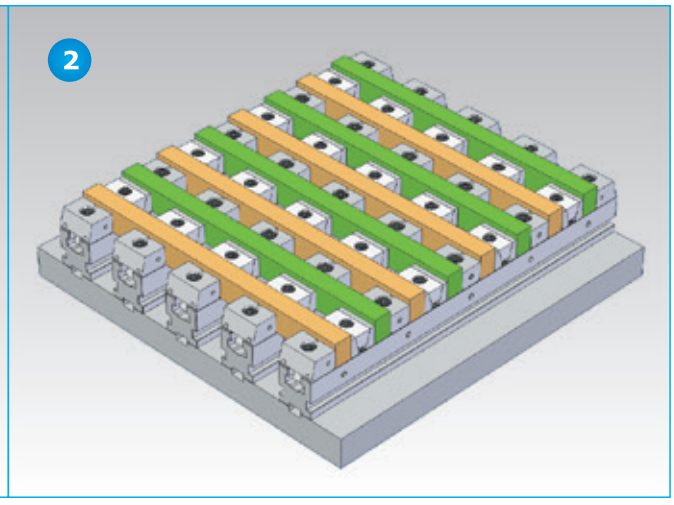


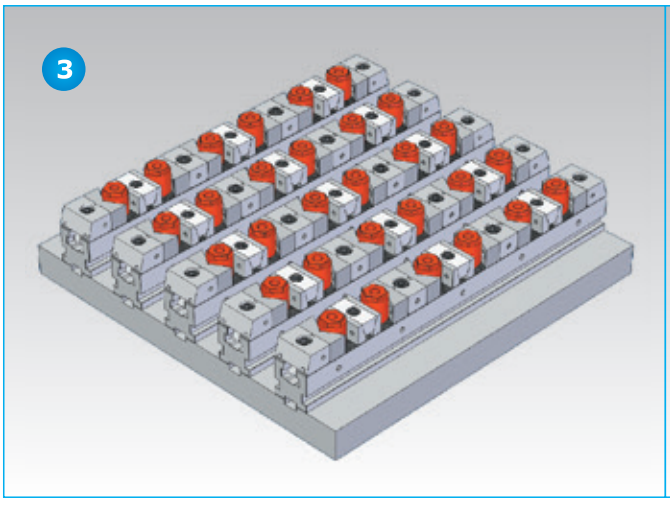


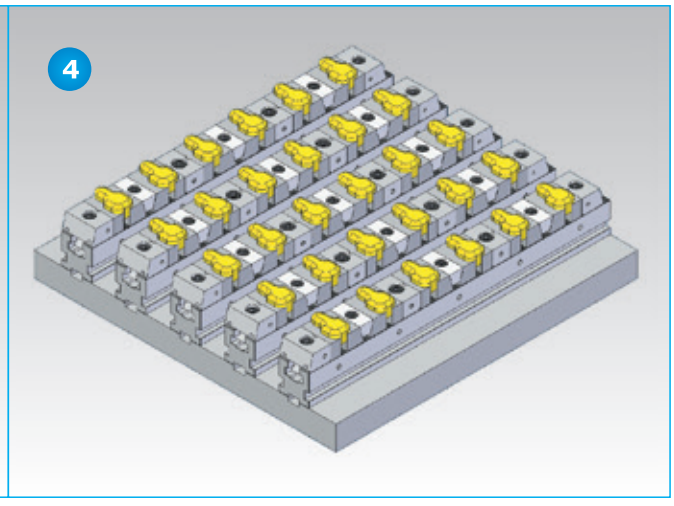

# SVF-C

## Clamping Examples

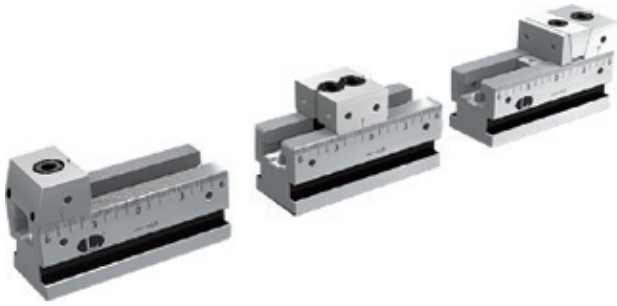

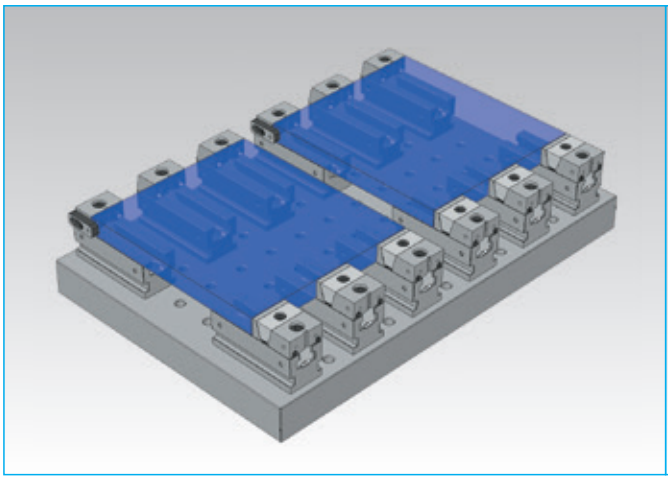

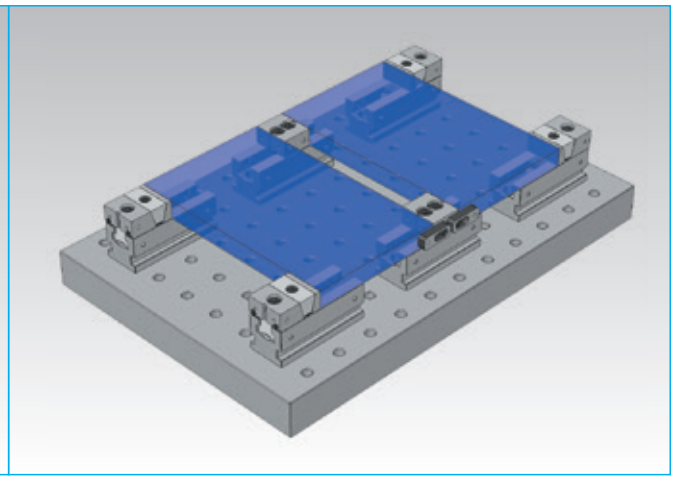

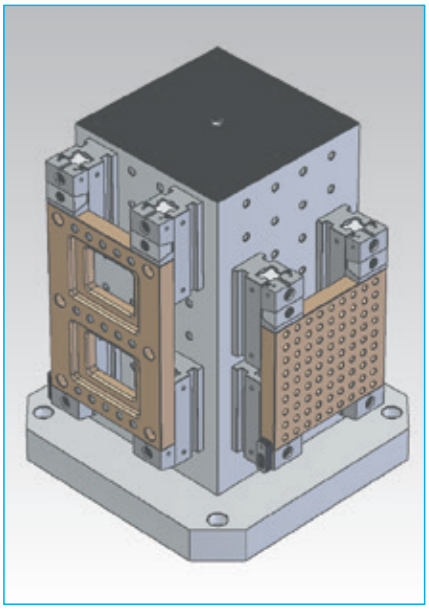

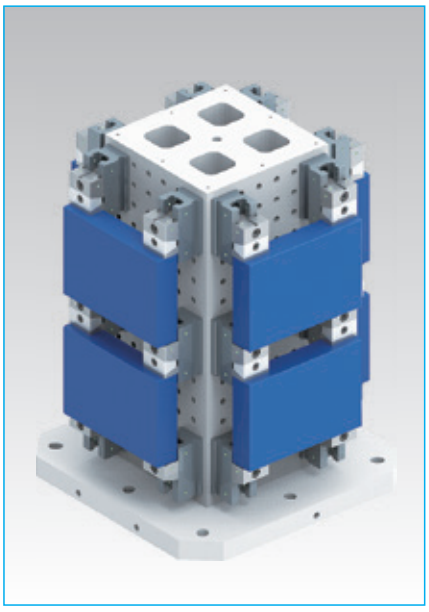

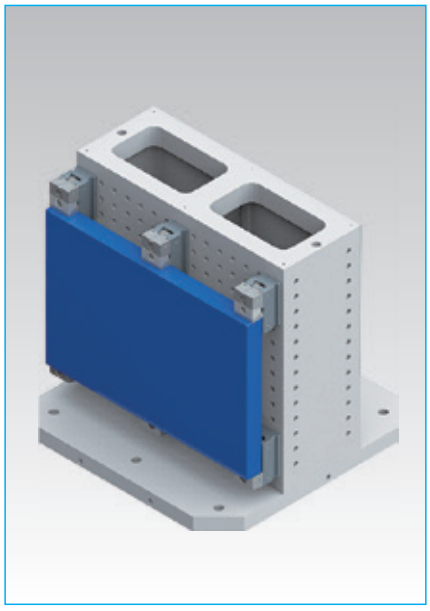

# The SVF vise system will:

- Optimize your machine real estate to the fullest extent
- Increase production
- Streamline the work holding process
- Give you a true competitive edge

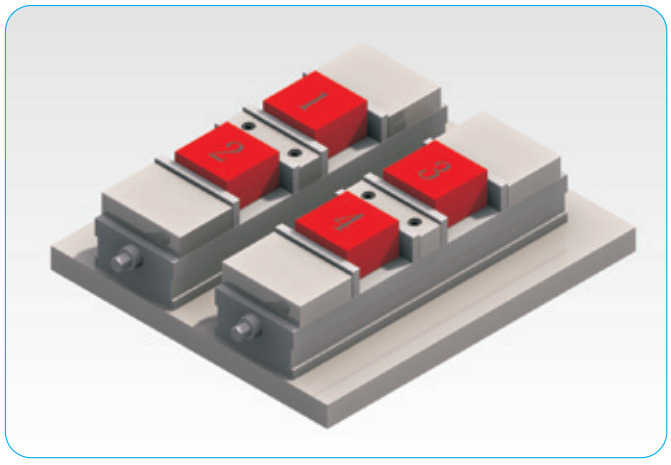

Traditional vise

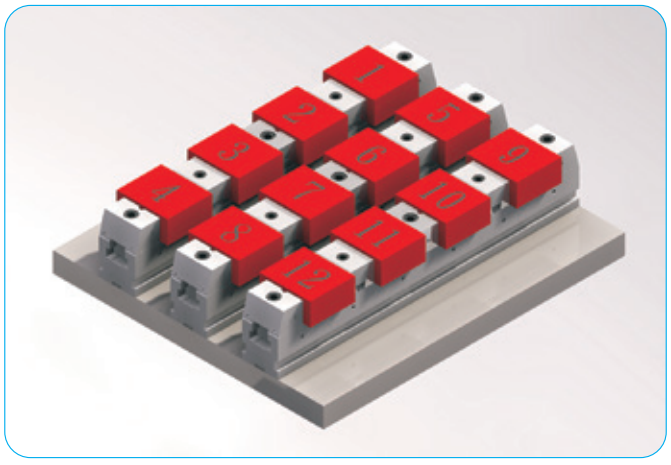

**SVF series vise**

**Clamping force:**
**SVF-50 : 2200 lbs**
**SVF-72 : 4400 lbs**
**SVF-100: 6600 lbs**

## SVF-A type vs SVF-B type

| Type | | SVF-A | SVF-B |
|---|---|---|---|
| Common features | 1 | Can accommodate a wide range of part quantities & sizes. | |
| | 2 | Can accommodate both regular & irregular shaped parts. | |
| Differences | 1 | One way clamping. | Two way clamping. |

# SVF-A FLEXIBLE LINE UP VISE SERIES

**One way clamping**

- Material 100% tool steel
- Heat treated HRC 55° & ground

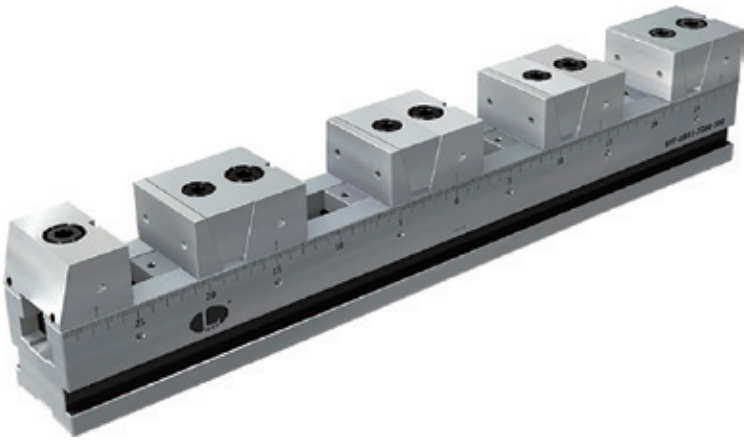

**High Capacity**
**High Flexibility**

Clamping force:
SVF-50 : 2200 lbs
SVF-72 : 4400 lbs
SVF-100 : 6600 lbs

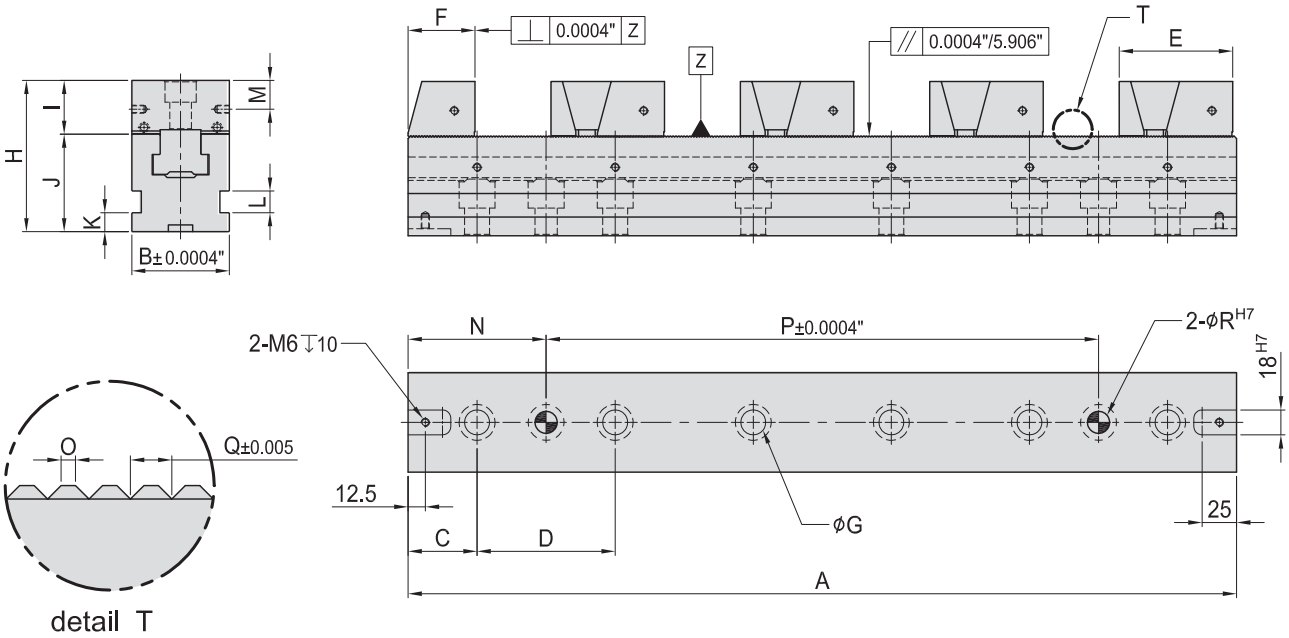


PLEASE NOTE THESE NUMBERS ARE ROUNDED. THIS CHART IS FOR REFERENCE ONLY.
PLEASE CONSULT CAD MODELS FOR EXACT DIMENSIONS AT WWW.TOMBSTONECITY.COM

| MODEL NO. | A" | B" | C" | D" | E" | F" | G | H" | I" | J" | K | L | M | N" | O | | P" | Q | | R" | lb |
|---|---|---|---|---|---|---|---|---|---|---|---|---|---|---|---|---|---|---|---|---|---|
| 10-SVF-A-5030-100* | 11.81 | 1.97 | 1.90 | 4 | 2.39 | 1.38 | 14 | 2.95 | 0.98 | 1.97 | 10 | 12 | 12.5 | 3.91 | 0.50 | 0.020" | 4 | 1.50 | 0.059" | 1/2 | 14.3 |
| 10-SVF-A-5040-100 | 15.75 | | 1.87 | | | | | | | | | | | 3.87 | | | 8 | | | | 18.7 |
| 10-SVF-A-5050-100 | 19.69 | 1.97 | 1.84 | 4 | 2.39 | 1.38 | 14 | 2.95 | 0.98 | 1.97 | 10 | 12 | 12.5 | 3.84 | 0.50 | 0.020" | 12 | 1.50 | 0.059" | 1/2 | 22.1 |
| 10-SVF-A-5060-100 | 23.62 | | 1.81 | | | | | | | | | | | 3.81 | | | 16 | | | | 25.4 |
| 10-SVF-A-5070-100 | 27.56 | 1.97 | 1.78 | 4 | 2.39 | 1.40 | 14 | 2.95 | 0.98 | 1.97 | 10 | 12 | 12.5 | 3.78 | 0.50 | 0.020" | 20 | 1.50 | 0.059" | 1/2 | 28.7 |
| 10-SVF-A-7240-100* | 15.75 | 2.83 | 1.87 | 4 | 3.23 | 1.89 | 18 | 4.41 | 1.56 | 2.83 | 14 | 16 | 21.3 | 3.87 | 0.70 | 0.028" | 8 | 2.00 | 0.079" | 5/8 | 41.9 |
| 10-SVF-A-7250-100 | 19.69 | | 1.84 | | | | | | | | | | | 3.84 | | | 12 | | | | 56.0 |
| 10-SVF-A-7260-100 | 23.62 | 2.83 | 1.81 | 4 | 3.23 | 1.89 | 18 | 4.41 | 1.56 | 2.83 | 14 | 16 | 21.3 | 3.81 | 0.70 | 0.028" | 16 | 2.00 | 0.079" | 5/8 | 59.5 |
| 10-SVF-A-7270-100 | 27.56 | | 1.78 | | | | | | | | | | | 3.78 | | | 20 | | | | 66.2 |
| 10-SVF-A-10040-100* | 15.75 | 3.94 | 1.87 | 4 | 3.67 | 1.89 | 18 | 4.53 | 1.70 | 2.83 | 14 | 16 | 22.2 | 3.87 | 0.85 | 0.033" | 8 | 2.50 | 0.098" | 5/8 | 63.9 |
| 10-SVF-A-10050-100 | 19.69 | | 1.84 | | | | | | | | | | | 3.84 | | | 12 | | | | 81.6 |
| 10-SVF-A-10060-100 | 23.62 | 3.94 | 1.81 | 4 | 3.67 | 1.89 | 18 | 4.53 | 1.70 | 2.83 | 14 | 16 | 22.2 | 3.81 | 0.85 | 0.033" | 16 | 2.50 | 0.098" | 5/8 | 90.4 |
| 10-SVF-A-10070-100 | 27.56 | | 1.78 | | | | | | | | | | | 3.78 | | | 20 | | | | 99.2 |

(SVF vises listed above come equipped to clamp 1-4 parts, if additional part clamping is required please order optional accessories as listed on pages 3-14 ~ 3-19)

* these units will only hold up to 3 parts.

# SVF-A

## Forcing direction

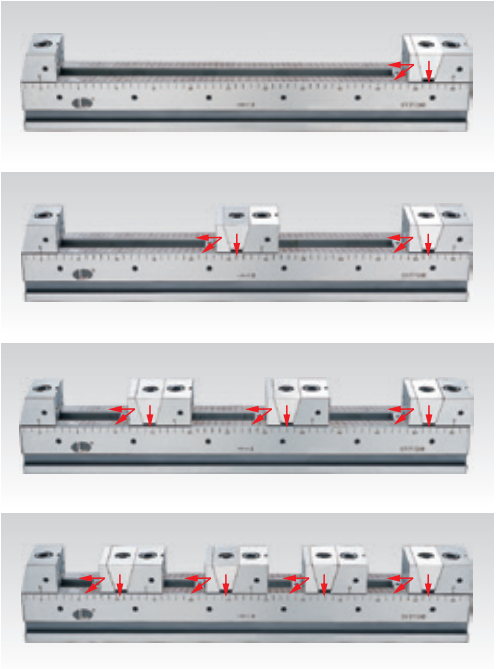

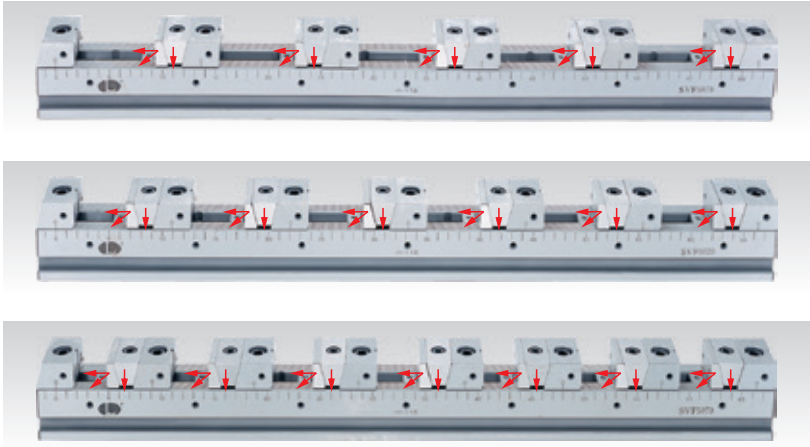

## Maximum width of the workpieces which can be clamped

| MODEL NO. | 1 pcs | 2 pcs | 3 pcs | 4 pcs |
|---|---|---|---|---|
| 10-SVF-A-5030 | 7.992" | 2.795" | 1.063" | -- |
| 10-SVF-A-5040 | 11.929" | 4.764" | 2.362" | 1.181" |
| 10-SVF-A-5050 | 15.866" | 6.732" | 3.701" | 2.165" |
| 10-SVF-A-5060 | 19.803" | 8.701" | 5.000" | 3.150" |
| 10-SVF-A-5070 | 23.740" | 10.669" | 6.299" | 4.134" |
| 10-SVF-A-7240 | 10.591" | 3.661" | 1.378" | -- |
| 10-SVF-A-7250 | 14.528" | 5.630" | 2.677" | 1.181" |
| 10-SVF-A-7260 | 18.465" | 7.598" | 3.976" | 2.165" |
| 10-SVF-A-7270 | 22.402" | 9.567" | 5.315" | 3.150" |
| 10-SVF-A-10040 | 10.157" | 3.228" | 0.945" | -- |
| 10-SVF-A-10050 | 14.094" | 5.197" | 2.244" | 0.748" |
| 10-SVF-A-10060 | 18.031" | 7.165" | 3.543" | 1.732" |
| 10-SVF-A-10070 | 21.969" | 9.134" | 4.882" | 2.717" |

| MODEL NO. | 5 pcs | 6 pcs | 7 pcs | 8 pcs | 9 pcs |
|---|---|---|---|---|---|
| 10-SVF-A-5030 | -- | -- | -- | -- | -- |
| 10-SVF-A-5040 | -- | -- | -- | -- | -- |
| 10-SVF-A-5050 | 1.260" | 0.630" | -- | -- | -- |
| 10-SVF-A-5060 | 2.047" | 1.299" | 0.787" | -- | -- |
| 10-SVF-A-5070 | 2.835" | 1.969" | 1.339" | 0.866" | 0.512" |
| 10-SVF-A-7240 | -- | -- | -- | -- | -- |
| 10-SVF-A-7250 | -- | -- | -- | -- | -- |
| 10-SVF-A-7260 | 1.102" | -- | -- | -- | -- |
| 10-SVF-A-7270 | 1.890" | 1.024" | -- | -- | -- |
| 10-SVF-A-10040 | -- | -- | -- | -- | -- |
| 10-SVF-A-10050 | -- | -- | -- | -- | -- |
| 10-SVF-A-10060 | 0.669" | -- | -- | -- | -- |
| 10-SVF-A-10070 | 1.457" | -- | -- | -- | -- |

# SVF-B FLEXIBLE LINE UP VISE SERIES

**Two way clamping**

- Material 100% tool steel
- Heat treated HRC 55° & ground

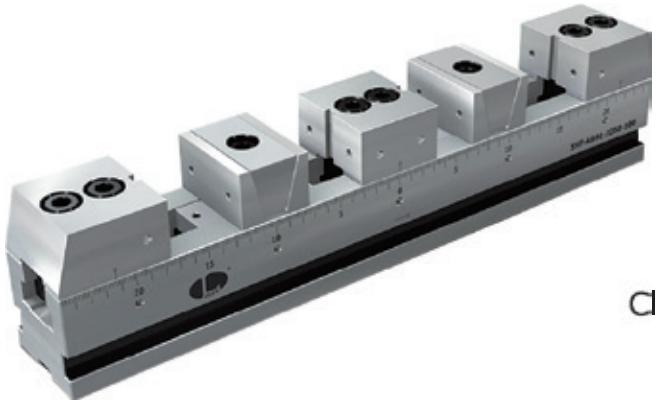

**High Capacity**
**High Flexibility**

Clamping force:
SVF-50 : 2200 lbs
SVF-72 : 4400 lbs
SVF-100 : 6600 lbs

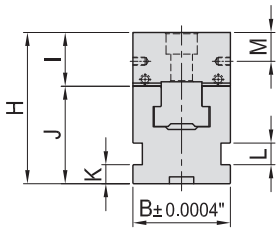


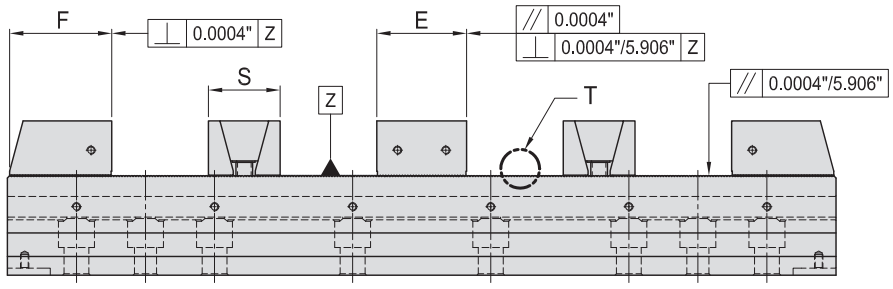


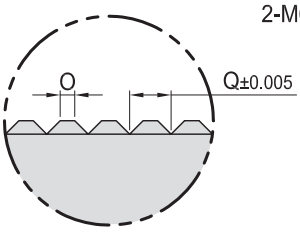


detail T

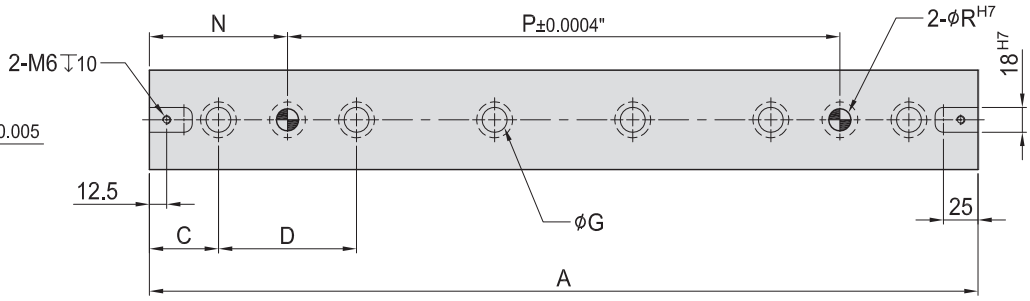


PLEASE NOTE THESE NUMBERS ARE ROUNDED. THIS CHART IS FOR REFERENCE ONLY.
PLEASE CONSULT CAD MODELS FOR EXACT DIMENSIONS AT WWW.TOMBSTONECITY.COM

| MODEL NO. | A" | B" | C" | D" | E" | F" | G | H" | I" | J" | K | L | M | N" | O | | P" | Q | | R" | S" | lb |
|---|---|---|---|---|---|---|---|---|---|---|---|---|---|---|---|---|---|---|---|---|---|---|
| 10-SVF-B-5030-100 | 11.81 | 1.97 | 1.90 | 4 | 1.73 | 1.97 | 14 | 2.95 | 0.98 | 1.97 | 10 | 12 | 12.5 | 3.91 | 0.50 | 0.020" | 4 | 1.5 | 0.059" | 1/2 | 1.42 | 14.3 |
| 10-SVF-B-5040-100 | 15.75 | | 1.87 | | | | | | | | | | | 3.87 | | | 8 | | | | | 16.8 |
| 10-SVF-B-5050-100 | 19.69 | 1.97 | 1.84 | 4 | 1.73 | 1.97 | 14 | 2.95 | 0.98 | 1.97 | 10 | 12 | 12.5 | 3.84 | 0.50 | 0.020" | 12 | 1.5 | 0.059" | 1/2 | 1.42 | 19.8 |
| 10-SVF-B-5060-100 | 23.62 | | 1.81 | | | | | | | | | | | 3.81 | | | 16 | | | | | 23.2 |
| 10-SVF-B-5070-100 | 27.56 | 1.97 | 1.78 | 4 | 1.73 | 1.97 | 14 | 2.95 | 0.98 | 1.97 | 10 | 12 | 12.5 | 3.78 | 0.50 | 0.020" | 20 | 1.5 | 0.059" | 1/2 | 1.42 | 26.5 |
| 10-SVF-B-7240-100 | 15.75 | 2.83 | 1.87 | 4 | 2.56 | 2.91 | 18 | 4.41 | 1.56 | 2.83 | 14 | 16 | 21.3 | 3.87 | 0.70 | 0.028" | 8 | 2.0 | 0.079" | 5/8 | 2.05 | 41.9 |
| 10-SVF-B-7250-100 | 19.69 | | 1.84 | | | | | | | | | | | 3.84 | | | 12 | | | | | 59.5 |
| 10-SVF-B-7260-100 | 23.62 | 2.83 | 1.81 | 4 | 2.56 | 2.91 | 18 | 4.41 | 1.56 | 2.83 | 14 | 16 | 21.3 | 3.81 | 0.70 | 0.028" | 16 | 2.0 | 0.079" | 5/8 | 2.05 | 55.1 |
| 10-SVF-B-7270-100 | 27.56 | | 1.78 | | | | | | | | | | | 3.78 | | | 20 | | | | | 60.6 |
| 10-SVF-B-10040-100* | 15.75 | 3.94 | 1.87 | 4 | 2.76 | 2.95 | 18 | 4.53 | 1.70 | 2.83 | 14 | 16 | 22.2 | 3.87 | 0.85 | 0.033" | 8 | 2.5 | 0.098" | 5/8 | 2.56 | 58.4 |
| 10-SVF-B-10050-100 | 19.69 | | 1.84 | | | | | | | | | | | 3.84 | | | 12 | | | | | 71.7 |
| 10-SVF-B-10060-100 | 23.62 | 3.94 | 1.81 | 4 | 2.76 | 2.95 | 18 | 4.53 | 1.70 | 2.83 | 14 | 16 | 22.2 | 3.81 | 0.85 | 0.033" | 16 | 2.5 | 0.098" | 5/8 | 2.56 | 80.7 |
| 10-SVF-B-10070-100 | 27.56 | | 1.78 | | | | | | | | | | | 3.78 | | | 20 | | | | | 90.4 |

(SVF vises listed above come equipped to clamp 1-4 parts, if additional part clamping is required please order optional accessories as listed on pages 3-14 ~ 3-19)

* these units will only hold up to 3 parts.

# SVF-B

## Forcing direction

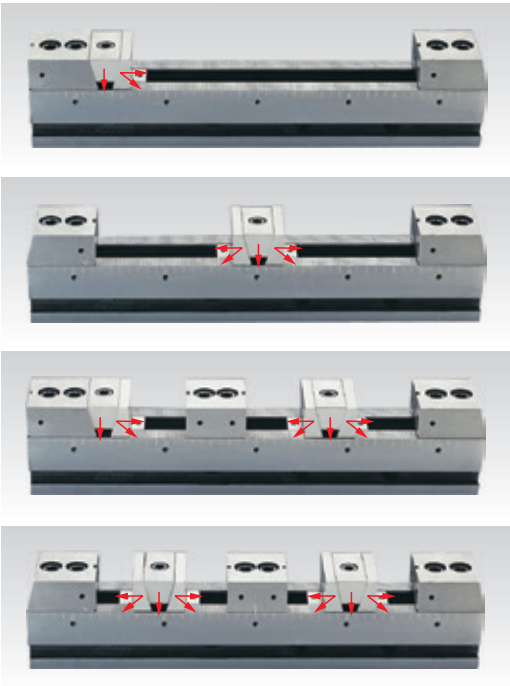

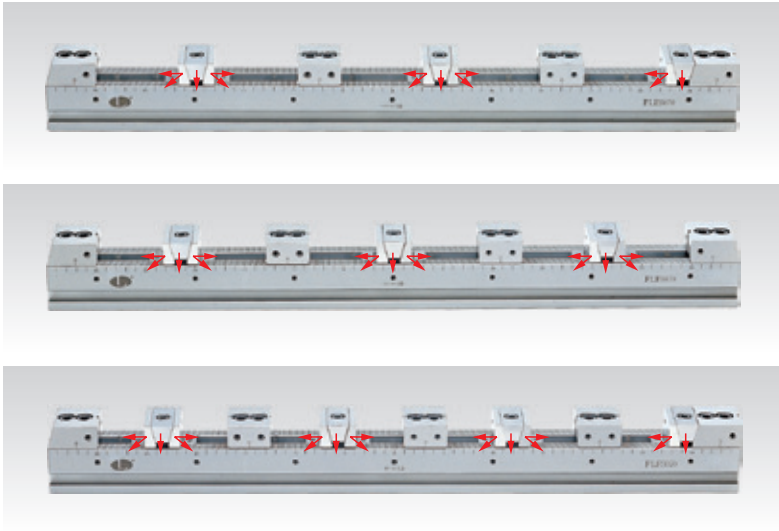

## Maximum width of the workpieces which can be clamped

| MODEL NO. | 1 pcs | 2 pcs | 3 pcs | 4 pcs | 5 pcs | 6 pcs |
|---|---|---|---|---|---|---|
| 10-SVF-B-5030 | 6.929" | 3.228" | 1.260" | 0.827" | – | -- |
| 10-SVF-B-5040 | 10.866" | 5.197" | 2.559" | 1.811" | 0.906" | 0.669" |
| 10-SVF-B-5050 | 14.803" | 7.165" | 3.858" | 2.795" | 1.693" | 1.339" |
| 10-SVF-B-5060 | 18.740" | 9.134" | 5.197" | 3.780" | 2.480" | 1.969" |
| 10-SVF-B-5070 | 22.677" | 11.102" | 6.496" | 4.764" | 3.268" | 2.638" |
| 10-SVF-B-7240 | 8.543" | 3.937" | 1.299" | 0.787" | – | -- |
| 10-SVF-B-7250 | 12.480" | 5.906" | 2.559" | 1.772" | 0.630" | -- |
| 10-SVF-B-7260 | 16.417" | 7.874" | 3.937" | 2.756" | 1.417" | 1.063" |
| 10-SVF-B-7270 | 20.354" | 9.843" | 5.236" | 3.740" | 2.205" | 1.732" |
| 10-SVF-B-10040 | 8.031" | 3.622" | 0.906" | -- | – | -- |
| 10-SVF-B-10050 | 11.969" | 5.591" | 2.205" | 1.457" | – | -- |
| 10-SVF-B-10060 | 15.906" | 7.559" | 3.504" | 2.441" | 1.024" | 0.709" |
| 10-SVF-B-10070 | 19.843" | 9.528" | 4.843" | 3.425" | 1.811" | 1.378" |

| MODEL NO. | 7 pcs | 8 pcs | 9 pcs | 10 pcs | 11 pcs |
|---|---|---|---|---|---|
| 10-SVF-B-5030 | -- | -- | – | -- | -- |
| 10-SVF-B-5040 | -- | -- | – | -- | -- |
| 10-SVF-B-5050 | 0.748" | 0.591" | – | -- | -- |
| 10-SVF-B-5060 | 1.299" | 1.102" | 0.669" | 0.551" | -- |
| 10-SVF-B-5070 | 1.890" | 1.575" | 1.102" | 0.945" | 0.630" |
| 10-SVF-B-7240 | -- | -- | – | -- | -- |
| 10-SVF-B-7250 | -- | -- | – | -- | -- |
| 10-SVF-B-7260 | -- | -- | – | -- | -- |
| 10-SVF-B-7270 | 0.906" | 0.709" | – | -- | -- |
| 10-SVF-B-10040 | -- | -- | – | -- | -- |
| 10-SVF-B-10050 | -- | -- | – | -- | -- |
| 10-SVF-B-10060 | -- | -- | – | -- | -- |
| 10-SVF-B-10070 | -- | -- | – | -- | -- |

# SVF-BE

Two way clamping

## FLEXIBLE LINE UP VISE SERIES

**BE series offers more parts held & larger size parts held - compared to the "B" series**

- Material 100% tool steel
- Heat treated HRC 55° & ground

**High Capacity**
**High Flexibility**

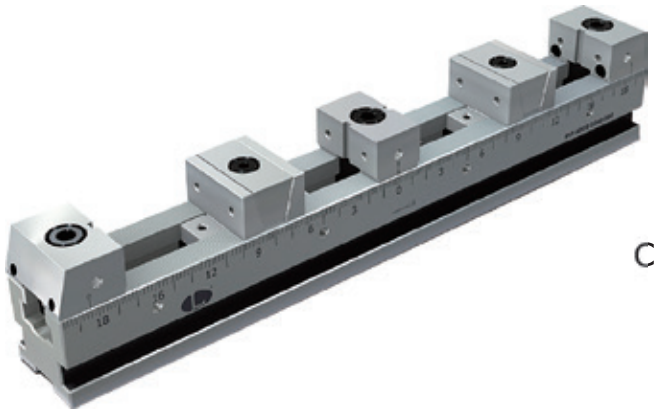

Clamping force:
SVF-50 : 2200 lbs
SVF-72 : 4400 lbs
SVF-100 : 6600 lbs

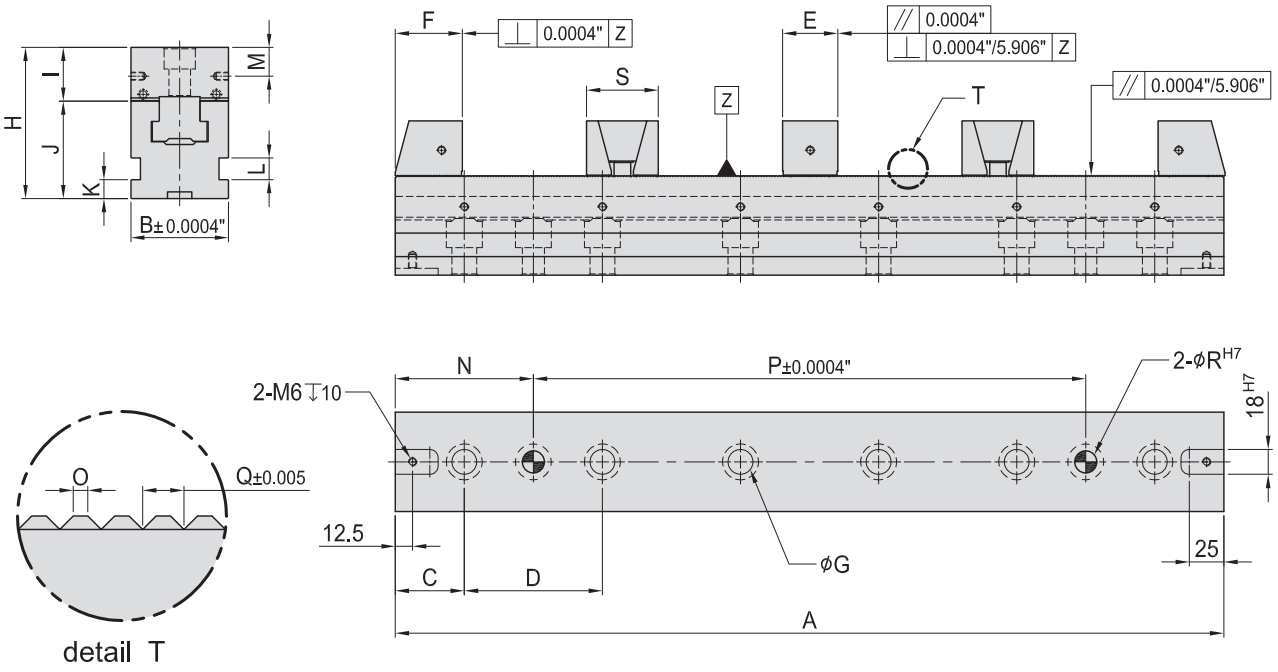


PLEASE NOTE THESE NUMBERS ARE ROUNDED. THIS CHART IS FOR REFERENCE ONLY.
PLEASE CONSULT CAD MODELS FOR EXACT DIMENSIONS AT WWW.TOMBSTONECITY.COM

| MODEL NO. | A" | B" | C" | D" | E" | F" | G | H" | I" | J" | K | L | M | N" | O | | P" | Q | | R" | S" | lb |
|---|---|---|---|---|---|---|---|---|---|---|---|---|---|---|---|---|---|---|---|---|---|---|
| 10-SVF-BE-5030-100 | 11.81 | 1.97 | 1.90 | 4 | 1.18 | 1.42 | 14 | 2.95 | 0.98 | 1.97 | 10 | 12 | 12.5 | 3.91 | 0.50 | 0.020" | 4 | 1.5 | 0.059" | 1/2 | 1.42 | 13.2 |
| 10-SVF-BE-5040-100 | 15.75 | | 1.87 | | | | | | | | | | | 3.87 | | | 8 | | | | | 16.5 |
| 10-SVF-BE-5050-100 | 19.69 | 1.97 | 1.84 | 4 | 1.18 | 1.42 | 14 | 2.95 | 0.98 | 1.97 | 10 | 12 | 12.5 | 3.84 | 0.50 | 0.020" | 12 | 1.5 | 0.059" | 1/2 | 1.42 | 19.8 |
| 10-SVF-BE-5060-100 | 23.62 | | 1.81 | | | | | | | | | | | 3.81 | | | 16 | | | | | 22.5 |
| 10-SVF-BE-5070-100 | 27.56 | 1.97 | 1.78 | 4 | 1.18 | 1.40 | 14 | 2.95 | 0.98 | 1.97 | 10 | 12 | 12.5 | 3.78 | 0.50 | 0.020" | 20 | 1.5 | 0.059" | 1/2 | 1.42 | 25.4 |
| 10-SVF-BE-7240-100 | 15.75 | 2.83 | 1.87 | 4 | 1.57 | 1.89 | 18 | 4.41 | 1.56 | 2.83 | 14 | 16 | 21.3 | 3.87 | 0.70 | 0.028" | 8 | 2.0 | 0.079" | 5/8 | 2.05 | 39.7 |
| 10-SVF-BE-7250-100 | 19.69 | | 1.84 | | | | | | | | | | | 3.84 | | | 12 | | | | | 46.3 |
| 10-SVF-BE-7260-100 | 23.62 | 2.83 | 1.81 | 4 | 1.57 | 1.89 | 18 | 4.41 | 1.56 | 2.83 | 14 | 16 | 21.3 | 3.81 | 0.70 | 0.028" | 16 | 2.0 | 0.079" | 5/8 | 2.05 | 52.9 |
| 10-SVF-BE-7270-100 | 27.56 | | 1.78 | | | | | | | | | | | 3.78 | | | 20 | | | | | 58.4 |
| 10-SVF-BE-10040-100 | 15.75 | 3.94 | 1.87 | 4 | 1.73 | 1.89 | 18 | 4.53 | 1.70 | 2.83 | 14 | 16 | 22.2 | 3.87 | 0.85 | 0.033" | 8 | 2.5 | 0.098" | 5/8 | 2.56 | 5.5 |
| 10-SVF-BE-10050-100 | 19.69 | | 1.84 | | | | | | | | | | | 3.84 | | | 12 | | | | | 68.4 |
| 10-SVF-BE-10060-100 | 23.62 | 3.94 | 1.81 | 4 | 1.73 | 1.89 | 18 | 4.53 | 1.70 | 2.83 | 14 | 16 | 22.2 | 3.81 | 0.85 | 0.033" | 16 | 2.5 | 0.098" | 5/8 | 2.56 | 77.2 |
| 10-SVF-BE-10070-100 | 27.56 | | 1.78 | | | | | | | | | | | 3.78 | | | 20 | | | | | 86.0 |

(SVF vises listed above come equipped to clamp 1-4 parts, if additional part clamping is required please order optional accessories as listed on pages 3-14 ~ 3-19)

# SVF-BE

## Forcing direction

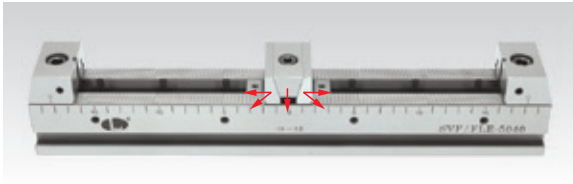

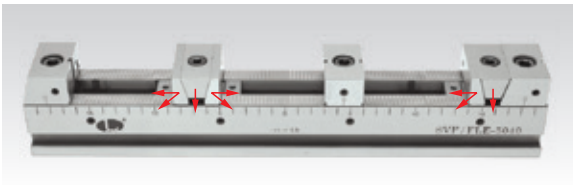

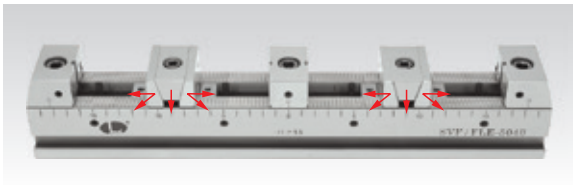

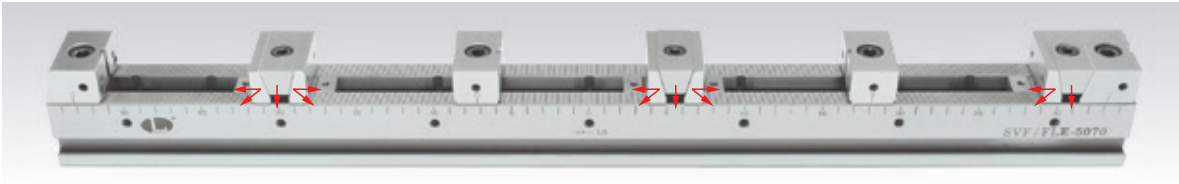

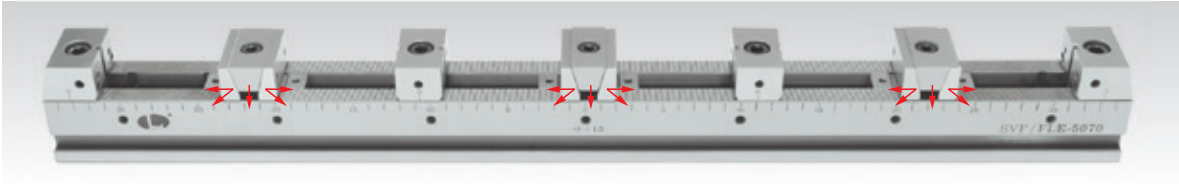

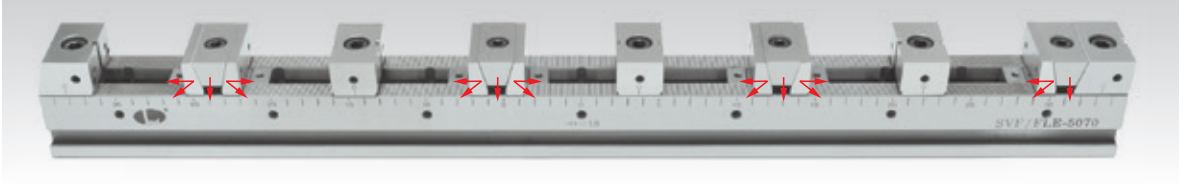

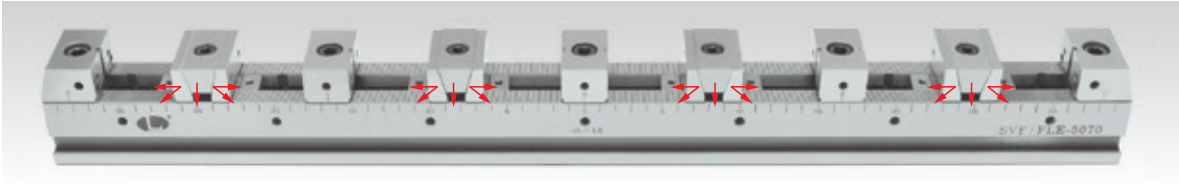

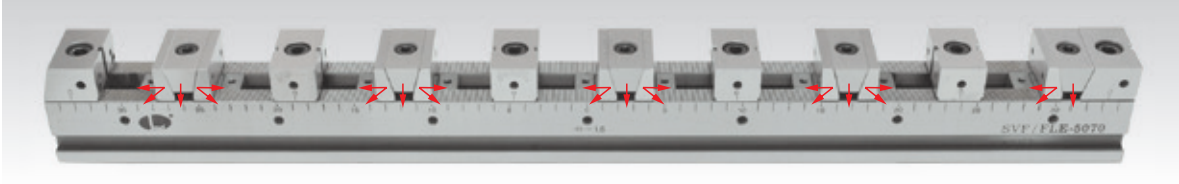

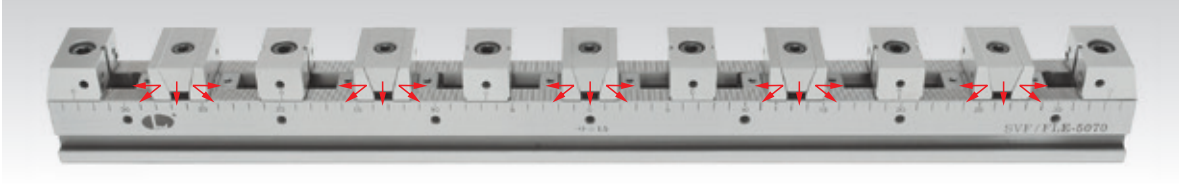

# SVF-BE

## Maximum width of the workpieces which can be clamped

| MODEL NO. | 1 pcs | 2 pcs | 3 pcs | 4 pcs | 5 pcs |
|---|---|---|---|---|---|
| 10-SVF-BE-5030 | 7.992" | 3.780" | 1.772" | 1.220" | 0.551" |
| 10-SVF-BE-5040 | 11.929" | 5.748" | 3.110" | 2.205" | 1.339" |
| 10-SVF-BE-5050 | 15.866" | 7.717" | 4.409" | 3.189" | 2.126" |
| 10-SVF-BE-5060 | 19.803" | 9.685" | 5.709" | 4.173" | 2.913" |
| 10-SVF-BE-5070 | 23.740" | 11.654" | 7.047" | 5.157" | 3.701" |
| 10-SVF-BE-7240 | 10.591" | 4.961" | 2.323" | 1.575" | 0.669" |
| 10-SVF-BE-7250 | 14.528" | 6.929" | 3.622" | 2.559" | 1.457" |
| 10-SVF-BE-7260 | 18.465" | 8.898" | 4.921" | 3.543" | 2.244" |
| 10-SVF-BE-7270 | 22.402" | 10.866" | 6.260" | 4.528" | 3.031" |
| 10-SVF-BE-10040 | 10.157" | 4.685" | 1.929" | 1.260" | -- |
| 10-SVF-BE-10050 | 14.094" | 6.654" | 3.268" | 2.244" | 1.102" |
| 10-SVF-BE-10060 | 18.031" | 8.622" | 4.567" | 3.228" | 1.890" |
| 10-SVF-BE-10070 | 21.969" | 10.591" | 5.866" | 4.213" | 2.677" |

| MODEL NO. | 6 pcs | 7 pcs | 8 pcs | 9 pcs |
|---|---|---|---|---|
| 10-SVF-BE-5030 | -- | -- | -- | -- |
| 10-SVF-BE-5040 | 1.024" | 0.591" | -- | -- |
| 10-SVF-BE-5050 | 1.693" | 1.142" | 0.945" | 0.630" |
| 10-SVF-BE-5060 | 2.362" | 1.693" | 1.417" | 1.024" |
| 10-SVF-BE-5070 | 2.992" | 2.283" | 1.929" | 1.457" |
| 10-SVF-BE-7240 | -- | -- | -- | -- |
| 10-SVF-BE-7250 | 1.102" | -- | -- | -- |
| 10-SVF-BE-7260 | 1.732" | 1.063" | 0.866" | -- |
| 10-SVF-BE-7270 | 2.402" | 1.614" | 1.339" | 0.866" |
| 10-SVF-BE-10040 | -- | -- | -- | -- |
| 10-SVF-BE-10050 | 0.748" | -- | -- | -- |
| 10-SVF-BE-10060 | 1.417" | 0.709" | -- | -- |
| 10-SVF-BE-10070 | 2.087" | 1.260" | 1.024" | -- |

| MODEL NO. | 10 pcs | 11 pcs | 12 pcs | 13 pcs |
|---|---|---|---|---|
| 10-SVF-BE-5030 | -- | -- | -- | -- |
| 10-SVF-BE-5040 | -- | -- | -- | -- |
| 10-SVF-BE-5050 | -- | -- | -- | -- |
| 10-SVF-BE-5060 | 0.866" | 0.591" | -- | -- |
| 10-SVF-BE-5070 | 1.260" | 0.945" | 0.827" | 0.630" |
| 10-SVF-BE-7240 | -- | -- | -- | -- |
| 10-SVF-BE-7250 | -- | -- | -- | -- |
| 10-SVF-BE-7260 | -- | -- | -- | -- |
| 10-SVF-BE-7270 | 0.709" | -- | -- | -- |
| 10-SVF-BE-10040 | -- | -- | -- | -- |
| 10-SVF-BE-10050 | -- | -- | -- | -- |
| 10-SVF-BE-10060 | -- | -- | -- | -- |
| 10-SVF-BE-10070 | -- | -- | -- | -- |

# SVF-C FLEXIBLE LINE UP VISE SERIES

- Material 100% tool steel
- Heat treated HRC 55° & ground

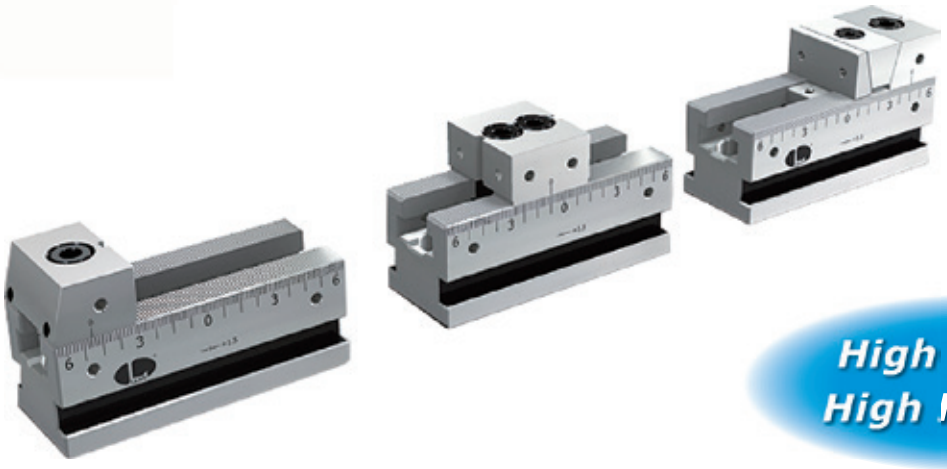

**High Capacity**
**High Flexibility**

PLEASE NOTE THESE NUMBERS ARE ROUNDED. THIS CHART IS FOR REFERENCE ONLY.
PLEASE CONSULT CAD MODELS FOR EXACT DIMENSIONS AT WWW.TOMBSTONECITY.COM

| MODEL NO. | lb |
|---|---|
| 10-SVF-C-5013-100-A | 4.4 |
| 10-SVF-C-7214-100-A | 11.0 |
| 10-SVF-C-10050-100-A | 16.5 |

| MODEL NO. | lb |
|---|---|
| 10-SVF-C-5013-100-B | 4.9 |
| 10-SVF-C-7214-100-B | 12.6 |
| 10-SVF-C-10050-100-B | 18.7 |

| MODEL NO. | lb |
|---|---|
| 10-SVF-C-5013-100-C | 5.5 |
| 10-SVF-C-7214-100-C | 13.7 |
| 10-SVF-C-10050-100-C | 21.6 |

## Main body

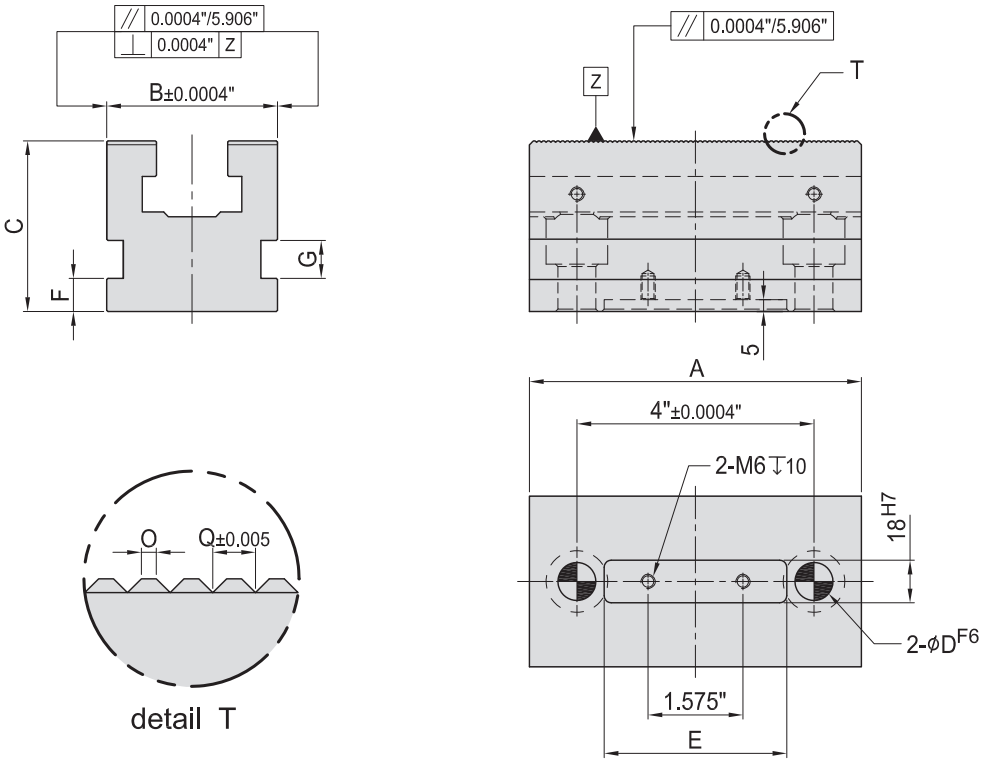


| MODEL NO. | A" | B" | C" | D" | E" | F | G | O | | Q | | lb |
|---|---|---|---|---|---|---|---|---|---|---|---|---|
| 10-SVF-AB01-5013-100 | 5.12 | 1.97 | 1.97 | 1/2 | 3.03 | 10 | 12 | 0.50 | 0.020" | 1.5 | 0.059" | 3.5 |
| 10-SVF-AB01-7214-100 | 5.51 | 2.83 | 2.83 | 5/8 | 3.03 | 14 | 16 | 0.70 | 0.028" | 2.0 | 0.079" | 8.8 |
| 10-SVF-AB01-10015-100 | 5.83 | 3.94 | 2.83 | 5/8 | 3.03 | 14 | 16 | 0.85 | 0.033" | 2.5 | 0.098" | 12.8 |

# SVF Optional accessory parts

## Main body

(For use on A, B & BE series)

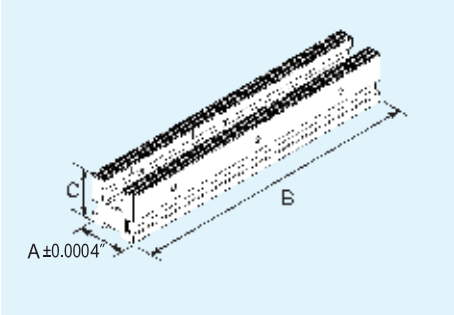


### AB01

| TYPE | A" | B" | C" | lb |
|---|---|---|---|---|
| 10-SVF-AB01-5030-100 | 1.97 | 11.81 | 1.97 | 8.82 |
| 10-SVF-AB01-5040-100 | | 15.75 | | 11.69 |
| 10-SVF-AB01-5050-100 | 1.97 | 19.69 | 1.97 | 14.77 |
| 10-SVF-AB01-5060-100 | | 23.62 | | 17.64 |
| 10-SVF-AB01-5070-100 | 1.97 | 27.56 | 1.97 | 20.95 |
| 10-SVF-AB01-7240-100 | 2.83 | 15.75 | 2.83 | 24.70 |
| 10-SVF-AB01-7250-100 | | 19.69 | | 30.87 |
| 10-SVF-AB01-7260-100 | 2.83 | 23.62 | 2.83 | 37.49 |
| 10-SVF-AB01-7270-100 | | 27.56 | | 44.10 |
| 10-SVF-AB01-10040-100 | 3.94 | 15.75 | 2.83 | 35.28 |
| 10-SVF-AB01-10050-100 | | 19.69 | | 44.10 |
| 10-SVF-AB01-10060-100 | 3.94 | 23.62 | 2.83 | 52.92 |
| 10-SVF-AB01-10070-100 | | 27.56 | | 61.74 |

## Stationary wedge-heavy duty

(For use on A & B series)

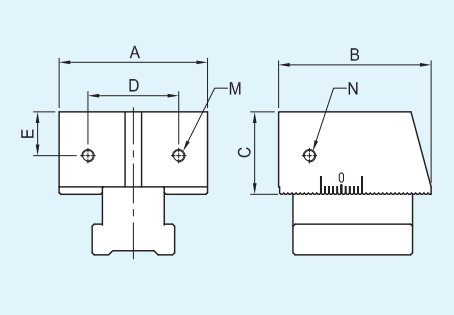


### AB02

| TYPE | A" | B" | C" | D" | E" | M | N | lb |
|---|---|---|---|---|---|---|---|---|
| SVF-AB02-50 | 1.97 | 1.97 | 0.98 | 1.18 | 0.49 | M5 | M6 | 1.32 |
| SVF-AB02-72 | 2.83 | 2.91 | 1.57 | 1.73 | 0.85 | M6 | M6 | 4.41 |
| SVF-AB02-100 | 3.94 | 2.95 | 1.69 | 2.52 | 0.87 | M8 | M8 | 5.73 |

## Serrated stationary wedge-heavy duty

(For use on A & B series)

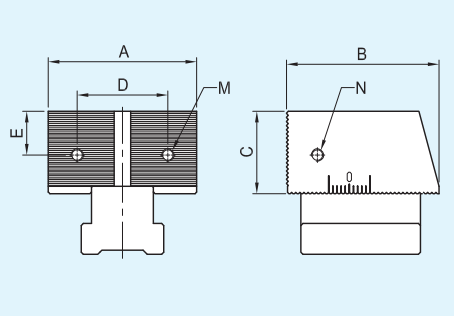


### ABG02

| TYPE | A" | B" | C" | D" | E" | M | N | lb |
|---|---|---|---|---|---|---|---|---|
| SVF-ABG02-50 | 1.97 | 1.97 | 0.98 | 1.18 | 0.49 | M5 | M6 | 1.32 |
| SVF-ABG02-72 | 2.83 | 2.91 | 1.57 | 1.73 | 0.85 | M6 | M6 | 4.41 |
| SVF-ABG02-100 | 3.94 | 2.95 | 1.69 | 2.52 | 0.87 | M8 | M8 | 5.73 |

## Step stationary wedge-heavy duty

(For use on A & B series)

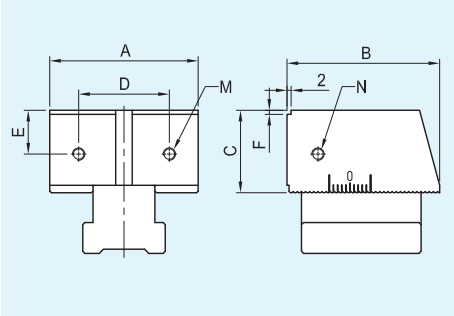


### ABS02

| TYPE | A" | B" | C" | D" | E" | M | N | F | lb |
|---|---|---|---|---|---|---|---|---|---|
| SVF-ABS02-502 | 1.97 | 1.97 | 0.98 | 1.18 | 0.49 | M5 | M6 | 2 | 1.32 |
| SVF-ABS02-505 | | | | | | | | 5 | |
| SVF-ABS02-722 | 2.83 | 2.91 | 1.57 | 1.73 | 0.85 | M6 | M6 | 2 | 4.41 |
| SVF-ABS02-725 | | | | | | | | 5 | |
| SVF-ABS02-1002 | 3.94 | 2.95 | 1.69 | 2.52 | 0.87 | M8 | M8 | 2 | 5.73 |
| SVF-ABS02-1005 | | | | | | | | 5 | |

## Stationary wedge - standard duty

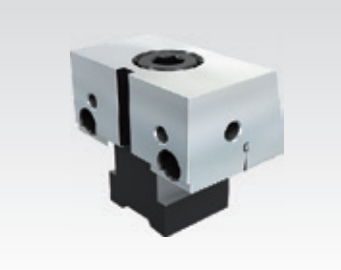

(For use on A , BE & C series)

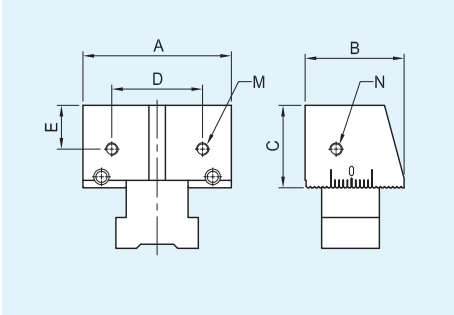


### AB03

| TYPE | A" | B" | C" | D" | E" | M | N | lb |
|---|---|---|---|---|---|---|---|---|
| SVF-AB03-50 | 1.97 | 1.38 | 0.98 | 1.18 | 0.49 | M5 | M6 | 0.88 |
| SVF-AB03-72 | 2.83 | 1.89 | 1.57 | 1.73 | 0.85 | M6 | M6 | 2.43 |
| SVF-AB03-100 | 3.94 | 1.89 | 1.69 | 2.52 | 0.87 | M8 | M8 | 3.75 |

# SVF Optional accessory parts

## Serrated Stationary wedge - standard duty

(For use on A ,BE & C series)

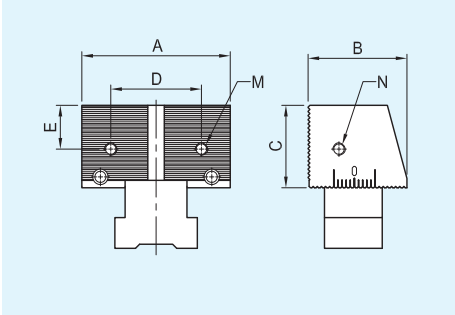


### ABG03

| TYPE | A" | B" | C" | D" | E" | M | N | lb |
|---|---|---|---|---|---|---|---|---|
| SVF-ABG03-50 | 1.97 | 1.38 | 0.98 | 1.18 | 0.49 | M5 | M6 | 0.88 |
| SVF-ABG03-72 | 2.83 | 1.89 | 1.57 | 1.73 | 0.85 | M6 | M6 | 2.43 |
| SVF-ABG03-100 | 3.94 | 1.89 | 1.69 | 2.52 | 0.87 | M8 | M8 | 3.75 |

## Step Stationary wedge - standard duty

(For use on A ,BE & C series)

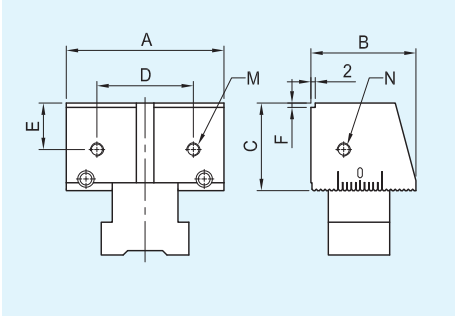


### ABS03

| TYPE | A" | B" | C" | D" | E" | F | M | N | lb |
|---|---|---|---|---|---|---|---|---|---|
| SVF-ABS03-502 | 1.97 | 1.38 | 0.98 | 1.18 | 0.49 | 2 | M5 | M6 | 0.88 |
| SVF-ABS03-505 | | | | | | 5 | | | |
| SVF-ABS03-722 | 2.83 | 1.89 | 1.57 | 1.73 | 0.85 | 2 | M6 | M6 | 2.43 |
| SVF-ABS03-725 | | | | | | 5 | | | |
| SVF-ABS03-1002 | 3.94 | 1.89 | 1.69 | 2.52 | 0.87 | 2 | M8 | M8 | 3.75 |
| SVF-ABS03-1005 | | | | | | 5 | | | |

## Moveable jaw

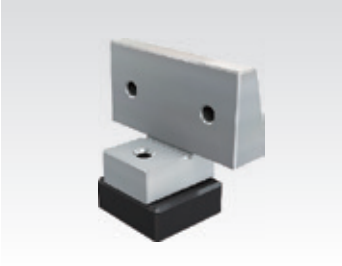

(For use on all series)

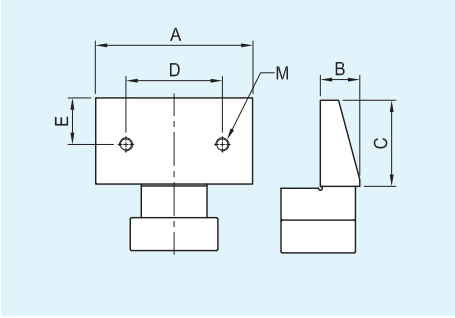


### AB04

| TYPE | A" | B" | C" | D" | E" | M | lb |
|---|---|---|---|---|---|---|---|
| SVF-AB04-50 | 1.97 | 0.47 | 0.96 | 1.18 | 0.49 | M5 | 0.44 |
| SVF-AB04-72 | 2.83 | 0.71 | 1.55 | 1.73 | 0.85 | M6 | 1.32 |
| SVF-AB04-100 | 3.94 | 0.83 | 1.65 | 2.52 | 0.87 | M8 | 2.21 |

## Serrated moveable jaw

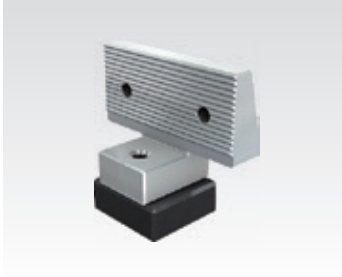

(For use on all series)

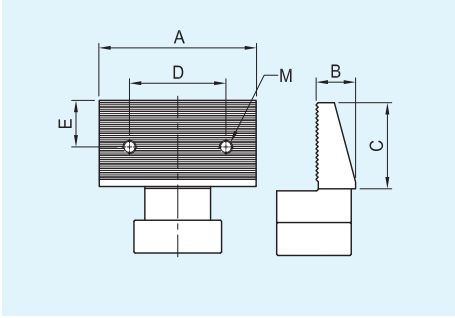


### ABG04

| TYPE | A" | B" | C" | D" | E" | M | lb |
|---|---|---|---|---|---|---|---|
| SVF-ABG04-50 | 1.97 | 0.47 | 0.96 | 1.18 | 0.49 | M5 | 0.44 |
| SVF-ABG04-72 | 2.83 | 0.71 | 1.55 | 1.73 | 0.85 | M6 | 1.32 |
| SVF-ABG04-100 | 3.94 | 0.83 | 1.65 | 2.52 | 0.87 | M8 | 2.21 |

## Step moveable jaw

(For use on all series)

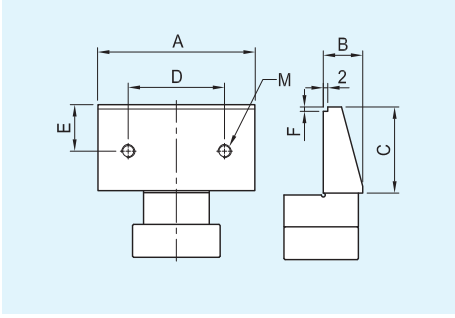


### ABS04

| TYPE | A" | B" | C" | D" | E" | F | M | lb |
|---|---|---|---|---|---|---|---|---|
| SVF-ABS04-502 | 1.97 | 0.47 | 0.96 | 1.18 | 0.49 | 2 | M5 | 0.44 |
| SVF-ABS04-505 | | | | | | 5 | | |
| SVF-ABS04-722 | 2.83 | 0.71 | 1.55 | 1.73 | 0.85 | 2 | M6 | 1.32 |
| SVF-ABS04-725 | | | | | | 5 | | |
| SVF-ABS04-1002 | 3.94 | 0.83 | 1.65 | 2.52 | 0.87 | 2 | M8 | 2.21 |
| SVF-ABS04-1005 | | | | | | 5 | | |

# SVF Optional accessory parts

## Moveable wedge

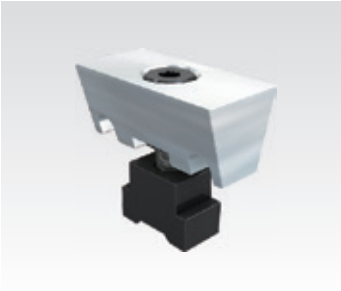

(For use on A & C series)

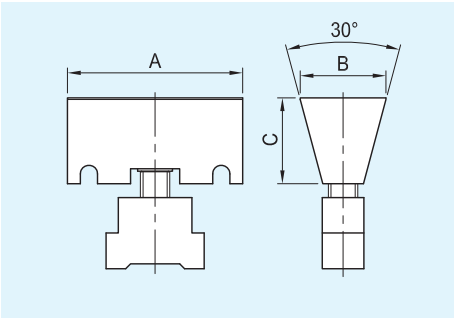


**A01**

| TYPE | A" | B" | C" | lb |
|---|---|---|---|---|
| SVF-A01-50 | 1.97 | 0.94 | 0.87 | 0.44 |
| SVF-A01-72 | 2.83 | 1.38 | 1.38 | 1.32 |
| SVF-A01-100 | 3.94 | 1.77 | 1.50 | 1.65 |

## Fixed jaw-heavy duty

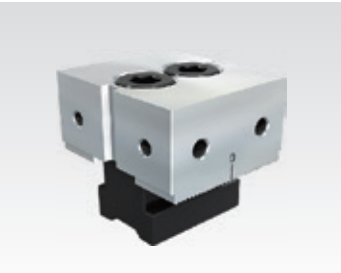

(For use on B & C series)

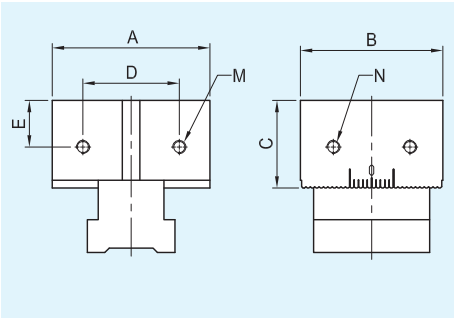


**B01**

| TYPE | A" | B" | C" | D" | E" | M | N | lb |
|---|---|---|---|---|---|---|---|---|
| SVF-B01-50 | 1.97 | 1.73 | 0.98 | 1.18 | 0.49 | M5 | M6 | 1.10 |
| SVF-B01-72 | 2.83 | 2.56 | 1.57 | 1.73 | 0.85 | M6 | M6 | 3.97 |
| SVF-B01-100 | 3.94 | 2.76 | 1.69 | 2.52 | 0.87 | M8 | M8 | 5.73 |

## Serrated Fixed jaw-heavy duty

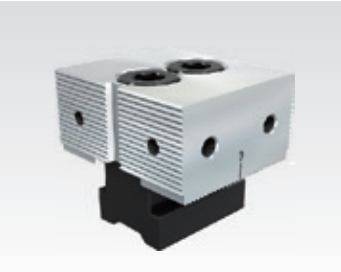

(For use on B & C series)

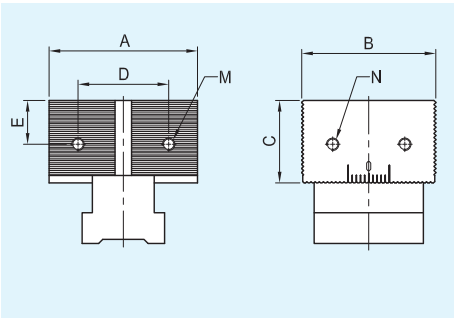


**BG01**

| TYPE | A" | B" | C" | D" | E" | M | N | lb |
|---|---|---|---|---|---|---|---|---|
| SVF-BG01-50 | 1.97 | 1.73 | 0.98 | 1.18 | 0.49 | M5 | M6 | 1.10 |
| SVF-BG01-72 | 2.83 | 2.56 | 1.57 | 1.73 | 0.85 | M6 | M6 | 3.97 |
| SVF-BG01-100 | 3.94 | 2.76 | 1.69 | 2.52 | 0.87 | M8 | M8 | 5.73 |

## Step Fixed jaw-heavy duty

(For use on B & C series)

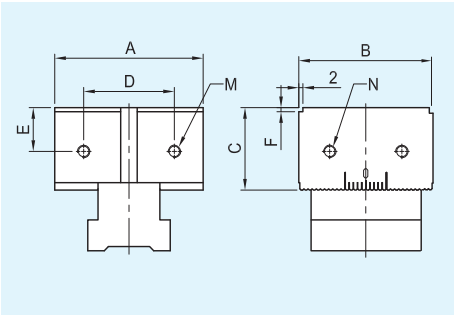


**BS01**

| TYPE | A" | B" | C" | D" | E" | F | M | N | lb |
|---|---|---|---|---|---|---|---|---|---|
| SVF-BS01-502 | 1.97 | 1.73 | 0.98 | 1.18 | 0.49 | 2 | M5 | M6 | 1.10 |
| SVF-BS01-505 | | | | | | 5 | | | |
| SVF-BS01-722 | 2.83 | 2.56 | 1.57 | 1.73 | 0.85 | 2 | M6 | M6 | 3.97 |
| SVF-BS01-725 | | | | | | 5 | | | |
| SVF-BS01-1002 | 3.94 | 2.76 | 1.69 | 2.52 | 0.87 | 2 | M8 | M8 | 5.73 |
| SVF-BS01-1005 | | | | | | 5 | | | |

## Moveable wedge

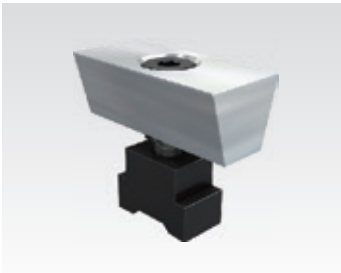

(For use on B & BE series)

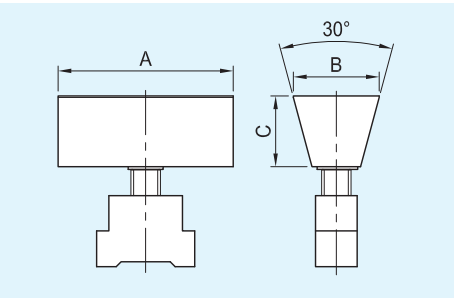


**B02**

| TYPE | A" | B" | C" | lb |
|---|---|---|---|---|
| SVF-B02-50 | 1.97 | 0.89 | 0.71 | 0.44 |
| SVF-B02-72 | 2.83 | 1.38 | 1.14 | 1.32 |
| SVF-B02-100 | 3.94 | 1.77 | 1.30 | 2.87 |

# SVF Optional accessory parts

## Fixed jaw-standard duty

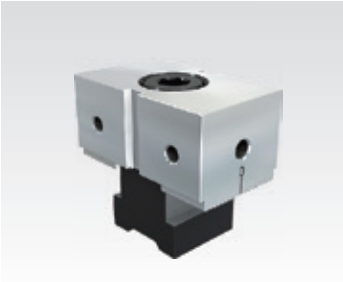

(For use on B & BE series)

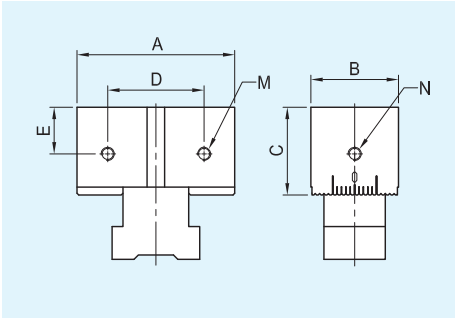


**B03**

| TYPE | A" | B" | C" | D" | E" | M | N | lb |
|---|---|---|---|---|---|---|---|---|
| SVF-B03-50 | 1.97 | 1.18 | 0.98 | 1.18 | 0.49 | M5 | M6 | 0.88 |
| SVF-B03-72 | 2.83 | 1.57 | 1.57 | 1.73 | 0.85 | M6 | M6 | 2.43 |
| SVF-B03-100 | 3.94 | 1.73 | 1.69 | 2.52 | 0.87 | M8 | M8 | 3.75 |

## Serrated fixed jaw-standard duty

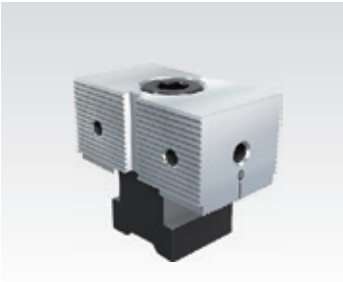

(For use on B & BE series)

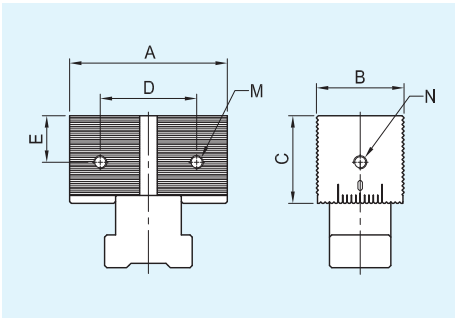


**BG03**

| TYPE | A" | B" | C" | D" | E" | M | N | lb |
|---|---|---|---|---|---|---|---|---|
| SVF-BG03-50 | 1.97 | 1.18 | 0.98 | 1.18 | 0.49 | M5 | M6 | 0.88 |
| SVF-BG03-72 | 2.83 | 1.57 | 1.57 | 1.73 | 0.85 | M6 | M6 | 2.43 |
| SVF-BG03-100 | 3.94 | 1.73 | 1.69 | 2.52 | 0.87 | M8 | M8 | 3.75 |

## Step fixed jaw-standard duty

(For use on B & BE series)

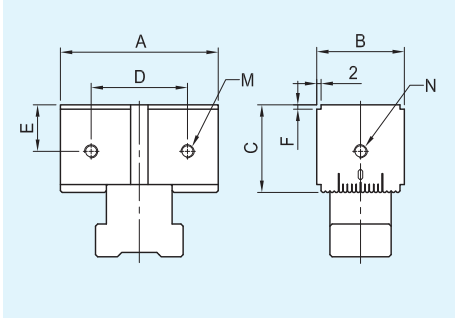


**BS03**

| TYPE | A" | B" | C" | D" | E" | F | M | N | lb |
|---|---|---|---|---|---|---|---|---|---|
| SVF-BS03-502 | 1.97 | 1.18 | 0.98 | 1.18 | 0.49 | 2 | M5 | M6 | 0.88 |
| SVF-BS03-505 | | | | | | 5 | | | |
| SVF-BS03-722 | 2.83 | 1.57 | 1.57 | 1.73 | 0.85 | 2 | M6 | M6 | 2.43 |
| SVF-BS03-725 | | | | | | 5 | | | |
| SVF-BS03-1002 | 3.94 | 1.73 | 1.69 | 2.52 | 0.87 | 2 | M8 | M8 | 3.75 |
| SVF-BS03-1005 | | | | | | 5 | | | |

## SVF-A Assembled

## SVF-B Assembled
## SVF-BE

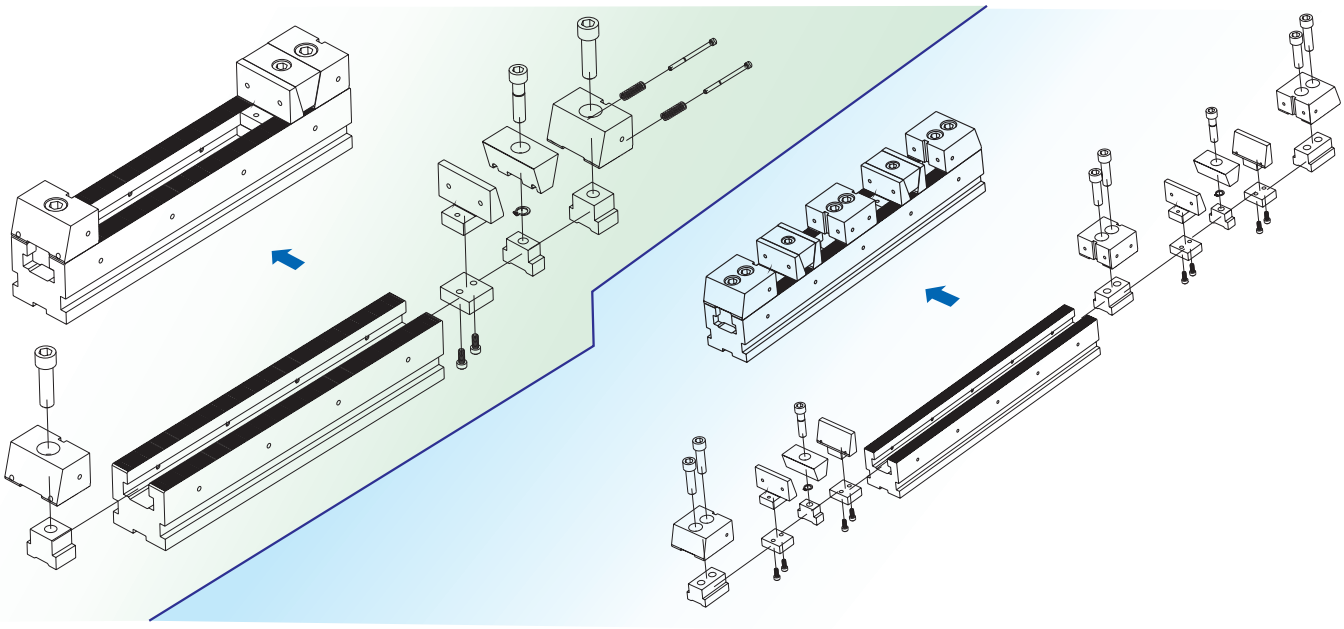

# SVF Optional accessory parts

## Fixed soft jaw

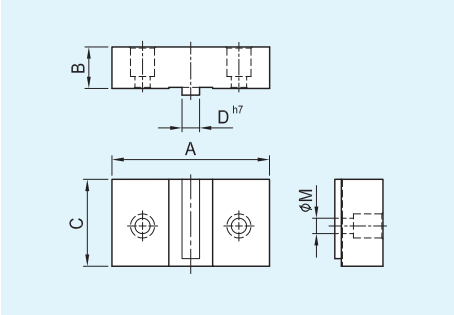


### S01

| TYPE | A" | B" | C" | D | M | lb |
|---|---|---|---|---|---|---|
| SVF-S01-50 | 1.97 | 0.67 | 0.98 | 5 | 6 | 0.44 |
| SVF-S01-50W | 3.15 | 1.06 | | | | 0.88 |
| SVF-S01-72 | 2.83 | 0.75 | 1.57 | 8 | 7 | 0.88 |
| SVF-S01-72W | 4.53 | 1.18 | | | | 2.43 |
| SVF-S01-100 | 3.94 | 0.98 | 1.69 | 10 | 9 | 1.98 |
| SVF-S01-100W | 5.91 | 1.38 | | | | 3.90 |

## Moveable soft jaw

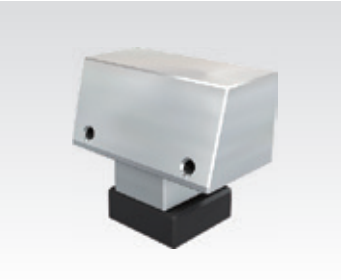

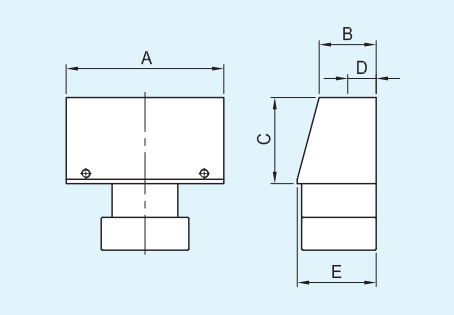


### S02

| TYPE | A" | B" | C" | D | F | lb |
|---|---|---|---|---|---|---|
| SVF-S02-50 | 1.97 | 0.83 | 0.96 | 13 | 1.06 | 0.66 |
| SVF-S02-50W | 3.15 | 1.34 | | | 1.61 | 1.54 |
| SVF-S02-72 | 2.83 | 1.02 | 1.56 | 19 | 1.42 | 2.21 |
| SVF-S02-72W | 4.53 | 1.57 | | | 1.97 | 4.19 |
| SVF-S02-100 | 3.94 | 1.38 | 1.67 | 25 | 1.81 | 4.41 |
| SVF-S02-100W | 5.91 | 1.97 | | | 2.40 | 7.06 |

D is the maximum dimension to be re-machined to accommodate the clamping requirement.

## Hardened V jaw

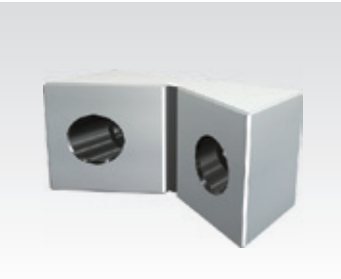

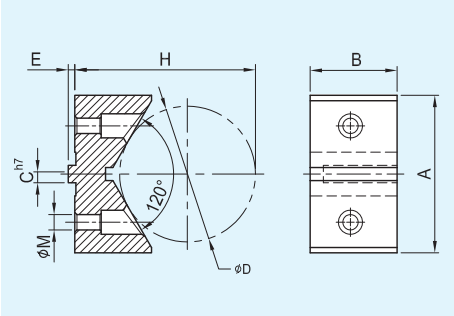


### S03

| TYPE | A" | B" | C" | D |
|---|---|---|---|---|
| SVF-S03-50 | 1.97 | 0.98 | 5 | 1.65 |
| SVF-S03-72 | 2.83 | 1.57 | 8 | 2.44 |
| SVF-S03-100 | 3.94 | 1.69 | 10 | 2.44 |

| TYPE | E | H" | M | CLAMP" (MAX) | lb |
|---|---|---|---|---|---|
| SVF-S03-50 | 2 | 2.16 | 6 | ϕ 2.76 | 0.44 |
| SVF-S03-72 | 3 | 3.25 | 7 | ϕ 4.33 | 1.32 |
| SVF-S03-100 | 4 | 3.55 | 9 | ϕ 6.30 | 2.65 |

## Hardened V jaw

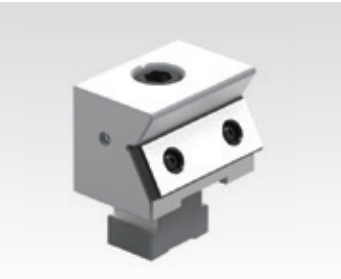

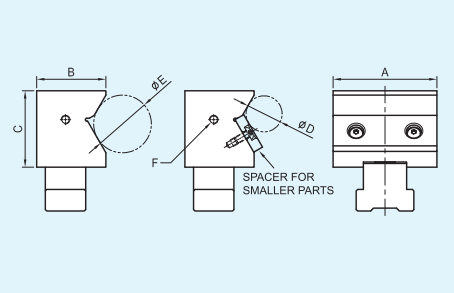


### S03A

| TYPE | A" | B" | C" | D"(MIN) | E"(MAX) | F |
|---|---|---|---|---|---|---|
| SVF-S03A-50 | 1.97 | 1.38 | 1.30 | 0.59 | 1.26 | M6 |
| SVF-S03A-72 | 2.83 | 1.89 | 2.09 | 1.00 | 2.28 | M6 |
| SVF-S03A-100 | 3.94 | 1.97 | 2.24 | 1.00 | 2.28 | M8 |

D (MIN)DIA CAN BE REDUCED WITH LIMITED TOP PART ACCESS

## Parallel

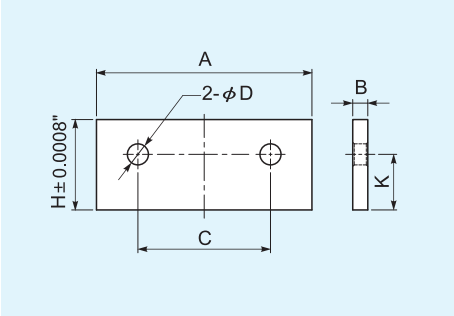


### S04

| TYPE | A" | B" | C" | D | H" | K" | lb |
|---|---|---|---|---|---|---|---|
| SVF-S04-50-17 | 1.95 | 0.197 | 1.18 | 6 | 0.669 | 0.48 | 0.1 |
| SVF-S04-50-20 | | 0.197 | | | 0.787 | | 0.1 |
| SVF-S04-50-22 | | 0.118 | | | 0.866 | | 0.1 |
| SVF-S04-72-25 | 2.81 | 0.197 | 1.73 | 7 | 0.984 | 0.72 | 0.2 |
| SVF-S04-72-30 | | 0.197 | | | 1.181 | | 0.2 |
| SVF-S04-72-35 | | 0.197 | | | 1.378 | | 0.2 |
| SVF-S04-72-37 | | 0.118 | | | 1.457 | | 0.3 |
| SVF-S04-100-29 | 3.92 | 0.315 | 2.52 | 9 | 1.142 | 0.83 | 0.4 |
| SVF-S04-100-33 | | 0.315 | | | 1.299 | | 0.5 |
| SVF-S04-100-38 | | 0.315 | | | 1.496 | | 0.5 |
| SVF-S04-100-40 | | 0.197 | | | 1.575 | | 0.2 |

# SVF Optional accessory parts

## Spacer - work piece stop plate

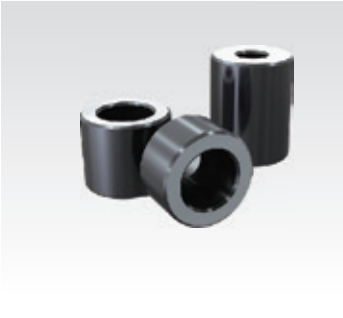

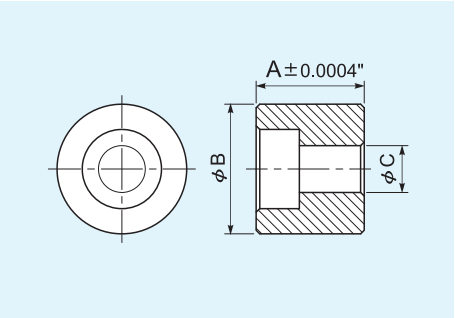


### S05

| TYPE | A" | B" | C" | lb |
|---|---|---|---|---|
| SVF-S05-10 | 0.394 | 0.709 | 0.256 | 0.1 |
| SVF-S05-15 | 0.591 | | | 0.1 |
| SVF-S05-23 | 0.906 | | | 0.1 |
| SVF-S05-100-15 | 0.591 | 0.984 | 0.354 | 0.1 |
| SVF-S05-100-20 | 0.787 | | | 0.1 |
| SVF-S05-100-25 | 0.984 | | | 0.1 |

## work piece stop plate

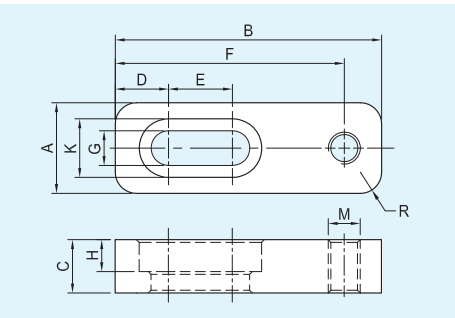


### S06

| TYPE | A" | B" | C" | D" | E" |
|---|---|---|---|---|---|
| SVF-S06-50 | 0.669 | 1.772 | 0.394 | 0.394 | 0.472 |
| SVF-S06-72 | 0.669 | 1.969 | 0.394 | 0.394 | 0.472 |
| SVF-S06-100 | 0.984 | 2.165 | 0.591 | 0.453 | 0.630 |

| TYPE | F" | G | H | K" | M | R | lb |
|---|---|---|---|---|---|---|---|
| SVF-S06-50 | 1.496 | 6.5 | 6.0 | 0.433 | M6 | 4 | 0.1 |
| SVF-S06-72 | 1.693 | 6.5 | 6.0 | 0.433 | M6 | 4 | 0.1 |
| SVF-S06-100 | 1.772 | 9.0 | 8.5 | 0.551 | M8 | 5 | 0.3 |

## Spring loaded T nut

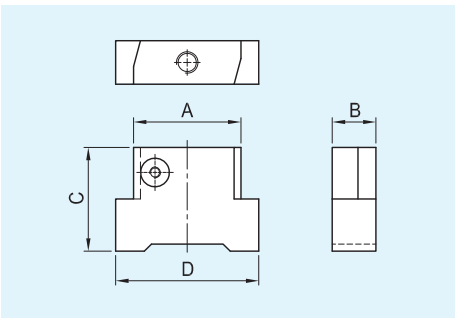


### S07

| TYPE | A" | B" | C" | D" | lb |
|---|---|---|---|---|---|
| SVF-S07-50 | 0.75 | 0.40 | 0.75 | 0.98 | 0.1 |
| SVF-S07-72 | 1.18 | 0.48 | 1.14 | 1.57 | 0.1 |
| SVF-S07-100 | 1.77 | 0.55 | 1.14 | 2.20 | 0.1 |

(Keep jaws from dropping when vise is in vertical plane)

## SERRATED JAW

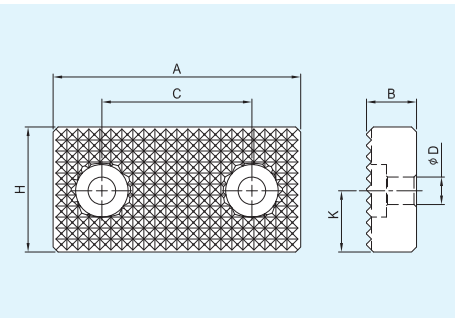


### S08

| TYPE | A" | B" | C" | D" | H" |
|---|---|---|---|---|---|
| SVF-S08-50 | 1.949 | 0.394 | 1.181 | 0.217 | 0.984 |
| SVF-S08-72 | 2.815 | 0.394 | 1.732 | 0.260 | 1.575 |
| SVF-S08-100 | 3.898 | 0.394 | 2.520 | 0.354 | 1.693 |

| TYPE | K" | lb |
|---|---|---|
| SVF-S08-50 | 0.482 | 0.176 |
| SVF-S08-72 | 0.726 | 0.397 |
| SVF-S08-100 | 0.827 | 0.573 |

## SERRATED STEP JAW

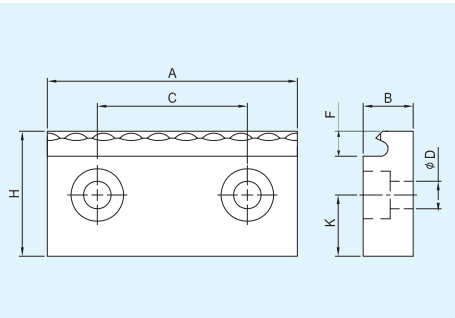


### S09

| TYPE | A" | B" | C" | D" | H" |
|---|---|---|---|---|---|
| SVF-S09-50-3 | 1.969 | 0.394 | 1.181 | 0.217 | 0.984 |
| SVF-S09-50-5 | 1.969 | 0.394 | 1.181 | 0.217 | 0.984 |
| SVF-S09-72-3 | 2.835 | 0.394 | 1.732 | 0.256 | 1.575 |
| SVF-S09-72-5 | 2.835 | 0.394 | 1.732 | 0.256 | 1.575 |
| SVF-S09-100-3 | 3.937 | 0.512 | 2.520 | 0.354 | 1.693 |
| SVF-S09-100-5 | 3.937 | 0.512 | 2.520 | 0.354 | 1.693 |

| TYPE | K" | F" | lb |
|---|---|---|---|
| SVF-S09-50-3 | 0.482 | 0.12 | 0.221 |
| SVF-S09-50-5 | 0.482 | 0.20 | 0.221 |
| SVF-S09-72-3 | 0.726 | 0.12 | 0.441 |
| SVF-S09-72-5 | 0.726 | 0.20 | 0.441 |
| SVF-S09-100-3 | 0.827 | 0.12 | 0.662 |
| SVF-S09-100-5 | 0.827 | 0.20 | 0.662 |

# SVF-CB M/C Octagonal cube

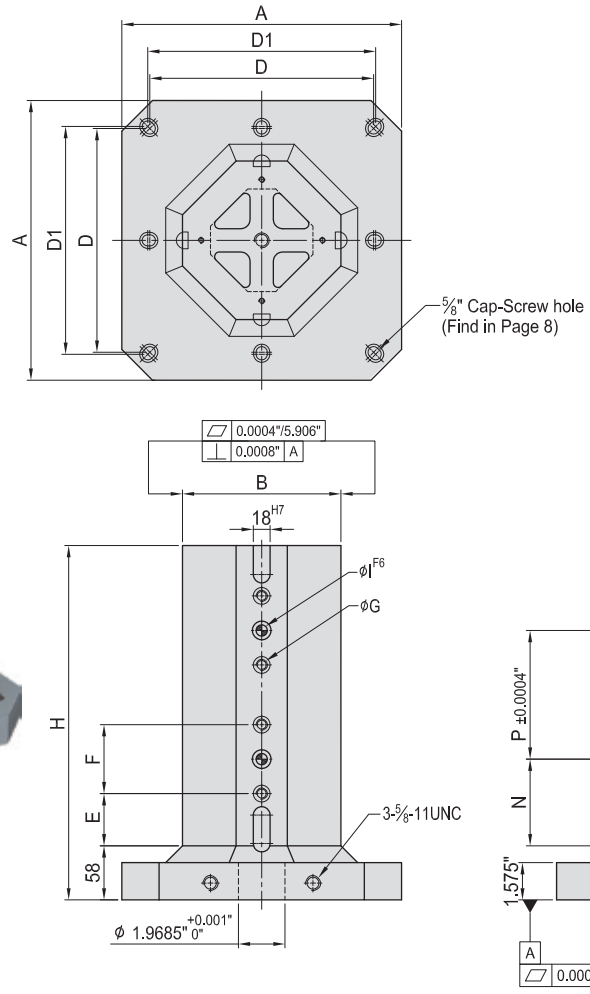


PLEASE NOTE THESE NUMBERS ARE ROUNDED. THIS CHART IS FOR REFERENCE ONLY.
PLEASE CONSULT CAD MODELS FOR EXACT DIMENSIONS AT WWW.TOMBSTONECITY.COM

| MODEL NO. | A" | B" | C" | D | D1" | E" | F" | G" | H" | I" | N" | P" | Mounting holes | lb |
|---|---|---|---|---|---|---|---|---|---|---|---|---|---|---|
| 10-SVF-5030-300CB8-100 | 11.81 | 6.69 | 2.17 | 200 | | 1.98 | 4 | 1/2-13UNC | 14.17 | 1/2 | 3.98 | 4 | 4 | 123 |
| 10-SVF-5030-320CB8-100 | 12.60 | | | | | | | | | | | | | 130 |
| 10-SVF-5040-300CB8-100 | 11.81 | 6.69 | 2.17 | 200 | | 1.95 | 4 | 1/2-13UNC | 18.11 | 1/2 | 3.98 | 8 | 4 | 143 |
| 10-SVF-5040-320CB8-100 | 12.60 | | | | | | | | | | | | | 152 |
| 10-SVF-5050-400CB8-100 | 15.75 | 7.87 | 2.17 | 320 | 11.81 | 1.92 | 4 | 1/2-13UNC | 22.05 | 1/2 | 3.92 | 12 | 4 | 253 |
| 10-SVF-5050-500CB8-100 | 19.69 | 9.84 | | 400 | 16.00 | | | | | | | | 8 | 357 |
| 10-SVF-5060-400CB8-100 | 15.75 | 7.87 | 2.17 | 320 | 11.81 | 1.89 | 4 | 1/2-13UNC | 25.98 | 1/2 | 3.89 | 16 | 4 | 283 |
| 10-SVF-5060-500CB8-100 | 19.69 | 9.84 | | 400 | 16.00 | | | | | | | | 8 | 394 |
| 10-SVF-5070-400CB8-100 | 15.75 | 7.87 | 2.17 | 320 | 11.81 | 1.86 | 4 | 1/2-13UNC | 29.92 | 1/2 | 3.86 | 20 | 4 | 313 |
| 10-SVF-5070-500CB8-100 | 19.69 | 9.84 | | 400 | 16.00 | | | | 29.92 | | | | 8 | 432 |
| 10-SVF-7240-300CB8-100 | 11.81 | 6.69 | 2.95 | 200 | | 1.95 | 4 | 5/8-11UNC | 18.11 | 5/8 | 3.95 | 8 | 4 | 161 |
| 10-SVF-7240-320CB8-100 | 12.60 | | | | | | | | | | | | | 170 |
| 10-SVF-7250-400CB8-100 | 15.75 | 7.87 | 2.95 | 320 | 11.81 | 1.92 | 4 | 5/8-11UNC | 22.05 | 5/8 | 3.92 | 12 | 4 | 259 |
| 10-SVF-7250-500CB8-100 | 19.69 | 9.84 | | 400 | 16.00 | | | | | | | | 8 | 363 |
| 10-SVF-7260-400CB8-100 | 15.75 | 7.87 | 2.95 | 320 | 11.81 | 1.89 | 4 | 5/8-11UNC | 25.98 | 5/8 | 3.89 | 16 | 4 | 289 |
| 10-SVF-7260-500CB8-100 | 19.69 | 9.84 | | 400 | 16.00 | | | | | | | | 8 | 401 |
| 10-SVF-7270-400CB8-100 | 15.75 | 7.87 | 2.95 | 320 | 11.81 | 1.86 | 4 | 5/8-11UNC | 29.92 | 5/8 | 3.86 | 20 | 4 | 320 |
| 10-SVF-7270-500CB8-100 | 19.69 | 9.84 | | 400 | 16.00 | | | | | | | | 8 | 439 |
| 10-SVF-7270-630CB8-100 | 24.80 | 11.81 | 2.95 | 400 | 11.81 | 1.86 | 4 | 5/8-11UNC | 29.92 | 5/8 | 3.86 | 20 | 8 | 635 |
| 10-SVF-10050-400CB8-100 | 15.75 | 7.87 | 4.13 | 320 | 11.81 | 1.92 | 4 | 5/8-11UNC | 22.05 | 5/8 | 3.92 | 12 | 4 | 286 |
| 10-SVF-10050-500CB8-100 | 19.69 | 9.84 | | 400 | 16.00 | | | | | | | | 8 | 396 |
| 10-SVF-10060-500CB8-100 | 19.69 | 9.84 | 4.13 | 400 | 16.00 | 1.89 | 4 | 5/8-11UNC | 25.98 | 5/8 | 3.89 | 16 | 8 | 441 |
| 10-SVF-10060-630CB8-100 | 24.80 | 11.81 | | 500 | 20.00 | | | | | | | | | 597 |
| 10-SVF-10070-500CB8-100 | 19.69 | 9.84 | 4.13 | 400 | 16.00 | 1.86 | 4 | 5/8-11UNC | 29.92 | 5/8 | 3.89 | 20 | 8 | 485 |
| 10-SVF-10070-630CB8-100 | 24.80 | 11.81 | | 500 | 20.00 | | | | | | | | | 651 |

(Order optional mounting cube as a separate item)

# SVFX INDEXING TABLE

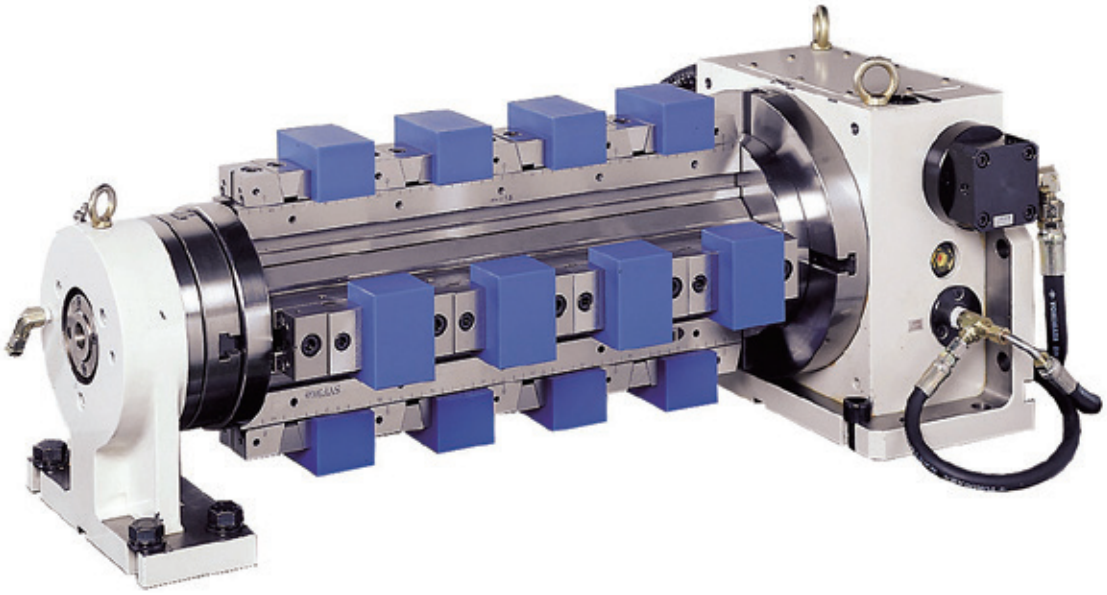

## ASSEMBLED

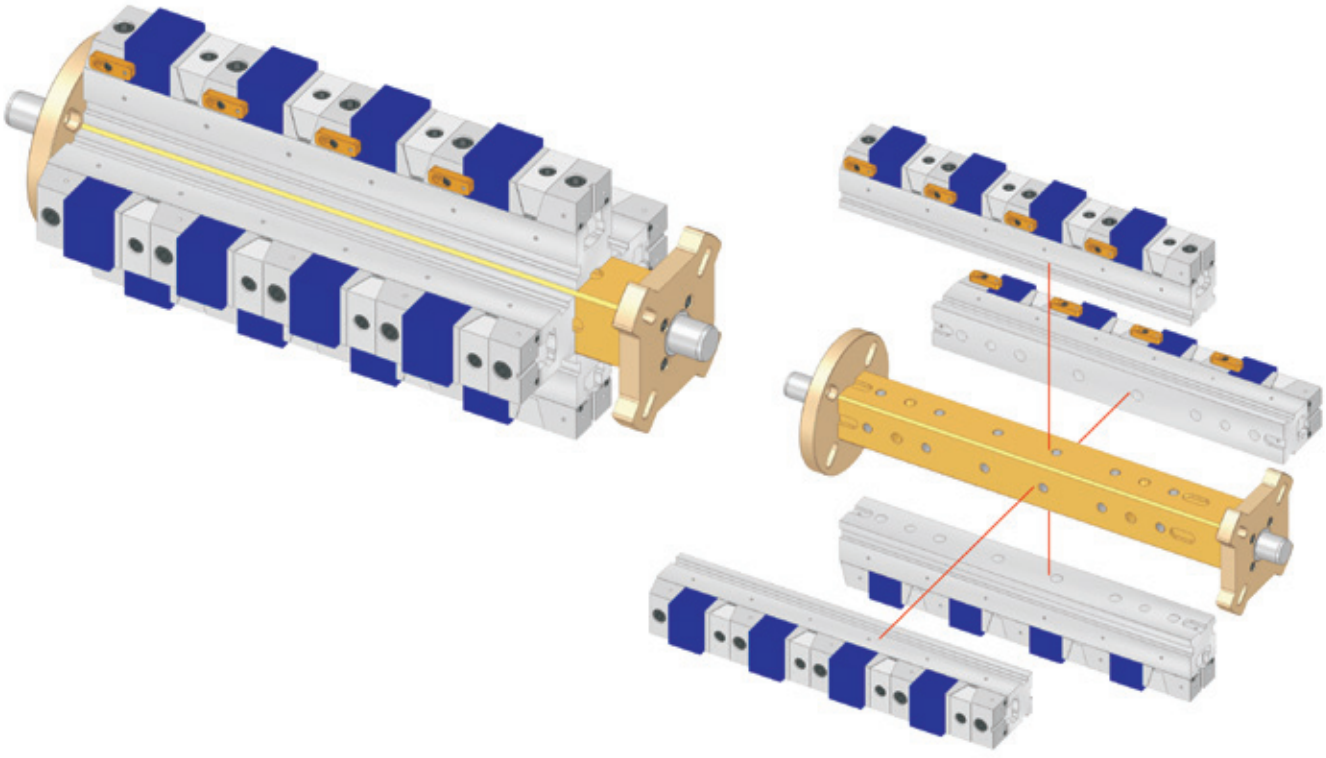

# SVFX

## AXLE

- Material: S45C

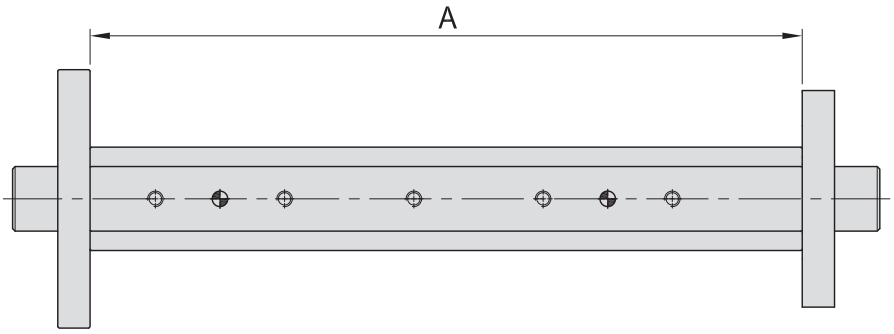


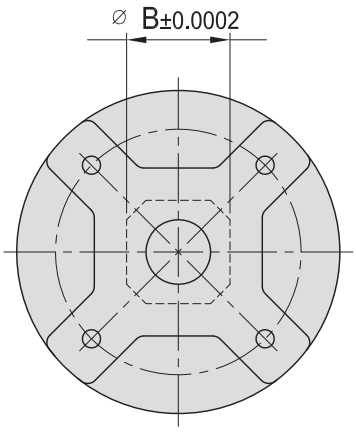


| Model | A" | B" | lb |
|---|---|---|---|
| SVFX-5030-100 | 13.78 | 3.15 | 35.3 |
| SVFX-5040-100 | 17.72 | | 44.1 |
| SVFX-5050-100 | 21.65 | 3.15 | 52.9 |
| SVFX-5060-100 | 25.59 | | 63.9 |
| SVFX-5070-100 | 29.53 | 3.15 | 72.8 |
| SVFX-7240-100 | 17.72 | | 46.3 |

| Model | A" | B" | lb |
|---|---|---|---|
| SVFX-7250-100 | 21.65 | 3.15 | 57.3 |
| SVFX-7260-100 | 25.59 | | 68.4 |
| SVFX-7270-100 | 29.53 | 3.15 | 77.2 |
| SVFX-10040-100 | 17.72 | 4.02 | 77.2 |
| SVFX-10050-100 | 21.65 | | 92.6 |
| SVFX-10060-100 | 25.59 | 4.02 | 110.3 |
| SVFX-10070-100 | 29.53 | | 125.7 |

*Net weight of Axel only-does not include vices

## BASE PLATE

- Material: S45C

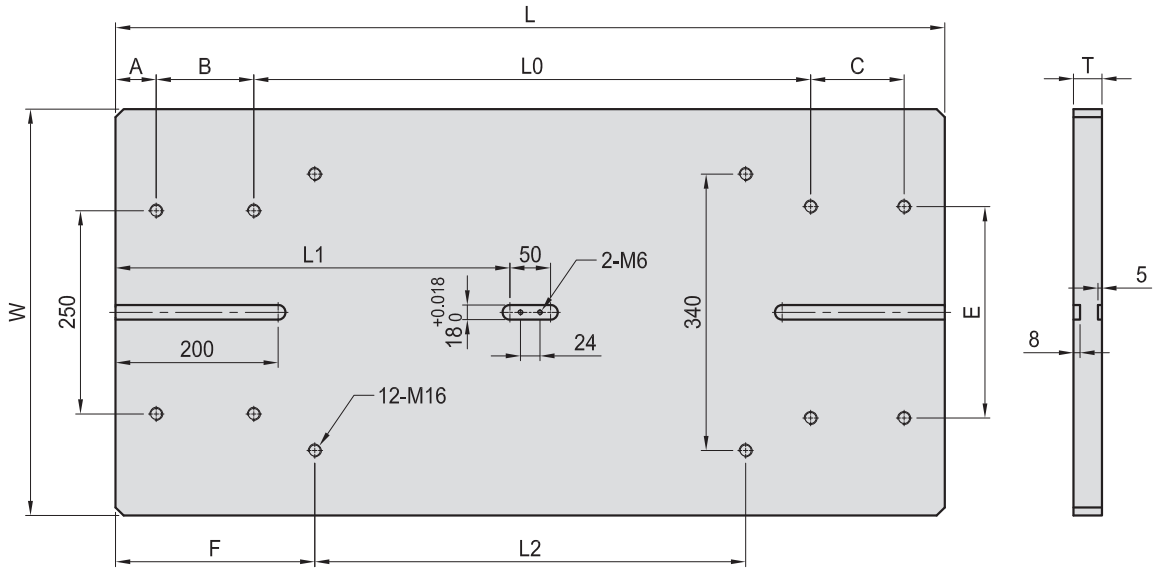


| Model | L" | L0" | L1" | L2 | W" | T | A | B | C | E" | F |
|---|---|---|---|---|---|---|---|---|---|---|---|
| SVFX-5030BP | 27.56 | 16.73 | 12.80 | 260 | 15.75 | 30 | 80 | 80 | 72 | 7.87 | 220 |
| SVFX-5040BP | 31.50 | 20.67 | 14.76 | 360 | | | | | | | |
| SVFX-5050BP | 35.43 | 24.61 | 16.73 | 460 | 15.75 | 30 | 80 | 80 | 72 | 7.87 | 220 |
| SVFX-5060BP | 39.37 | 28.54 | 18.70 | 560 | | | | | | | |
| SVFX-5070BP | 43.30 | 32.48 | 20.67 | 660 | 15.75 | 30 | 80 | 80 | 72 | 7.87 | 220 |
| SVFX-7240BP | 36.22 | 20.47 | 17.13 | 430 | 19.69 | 35 | 45 | 185 | 135 | 11.81 | 280 |
| SVFX-7250BP | 40.16 | 24.41 | 19.09 | 530 | | | | | | | |
| SVFX-7260BP | 44.09 | 28.35 | 21.06 | 630 | 19.69 | 35 | 45 | 185 | 135 | 11.81 | 280 |
| SVFX-7270BP | 48.03 | 32.28 | 23.03 | 730 | | | | | | | |

*Special design welcome!*

(Optional accessory available for being ordered separately)

## Standard parts included with SVF-A & SVF-B SVF-BE SVF-BE vises

| For | T-slot nut | | Clamp | | Screw | | Threaded dowel pin | | Locating key | | Hexagonal driver | |
|---|---|---|---|---|---|---|---|---|---|---|---|---|
| | MODEL NO. | QTY | MODEL NO. | QTY | MODEL NO. | QTY | MODEL NO. | QTY | MODEL NO. | QTY | MODEL NO. | QTY |
| 50 | 10-PT06 -1404 | 4 pcs | SVF-P01-50 | 4 pcs | CAP-1/2" -13UNC | Same as hole | 10-PT11 -0434 | 2 pcs | PT27-1810 CAP-M6-10L | 2 pcs | SPN-M6HEX<br>SPN-M8HEX | 1 pc<br>1 pc |
| 72 | 10-PT06 -1805 | | SVF-P01-72 | | CAP-5/8" -11UNC | | 10-PT11 -0542 | | | | SPN-M10HEX<br>SPN-M12HEX | 1 pc<br>1 pc |
| 100 | 10-PT06 -1805 | | SVF-P01-72 | | CAP-5/8" -11UNC | | 10-PT11 -0542 | | | | SPN-M12HEX<br>SPN-M14HEX | 1 pc<br>1 pc |

# TCP TOOL TIGHTENING FIXTURE

## Tool Holder is Changeable

Easy assemble and dis-assemble tool holder from main body while pressing the valve on the right hand side of the unit.

## Tool Holder is Adjustable up to 360°

Easily adjusts tool holders for a full 360° (45° increments) by pushing the valve on the top of the tightening fixture.

4pcs of M10x40mm bolt can be fastened from the top of the mounting flange or 4pcs of M12 bolt can be fastened from the bottom of the mounting

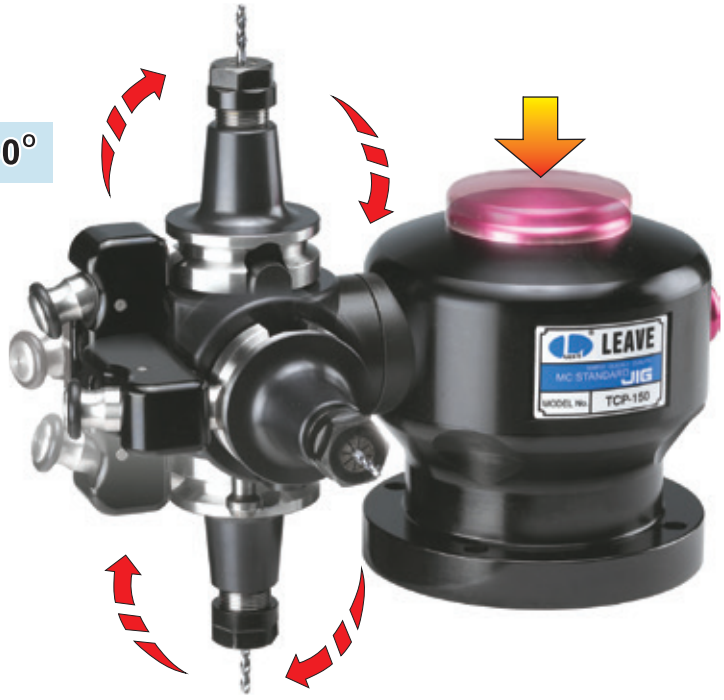


## Tightening Fixture Main Body

| Model No. | lb |
|---|---|
| TCP-150 | 13.23 |

## Tool Holder

| Model No. | lb |
|---|---|
| TCP-BT30 | 5.07 |
| TCP-BT40 | 6.17 |
| TCP-BT50 | 10.58 |
| TCP-HSK-A-40 | 7.27 |
| TCP-HSK-A-63 | 5.07 |
| TCP-HSK-A-80 | 7.71 |

| Model No. | lb |
|---|---|
| TCP-HSK-A-100 | 8.37 |
| TCP-HSK-E-25 | 5.07 |
| TCP-HSK-E-32 | 5.51 |
| TCP-HSK-E-40 | 6.17 |
| TCP-HSK-E-50 | 6.61 |
| TCP-HSK-F-63 | 7.05 |

# NBK

## ROUND SUPER THIN CHUCK

- The handle with an angle of 30 degrees makes for easy operation.
- The "super thin" design of chucks increase the "allowable distance" of machining operations.
- Chuck flange makes loading and unloading operations simpler and more convenient.
- Uses American Standard jaws.

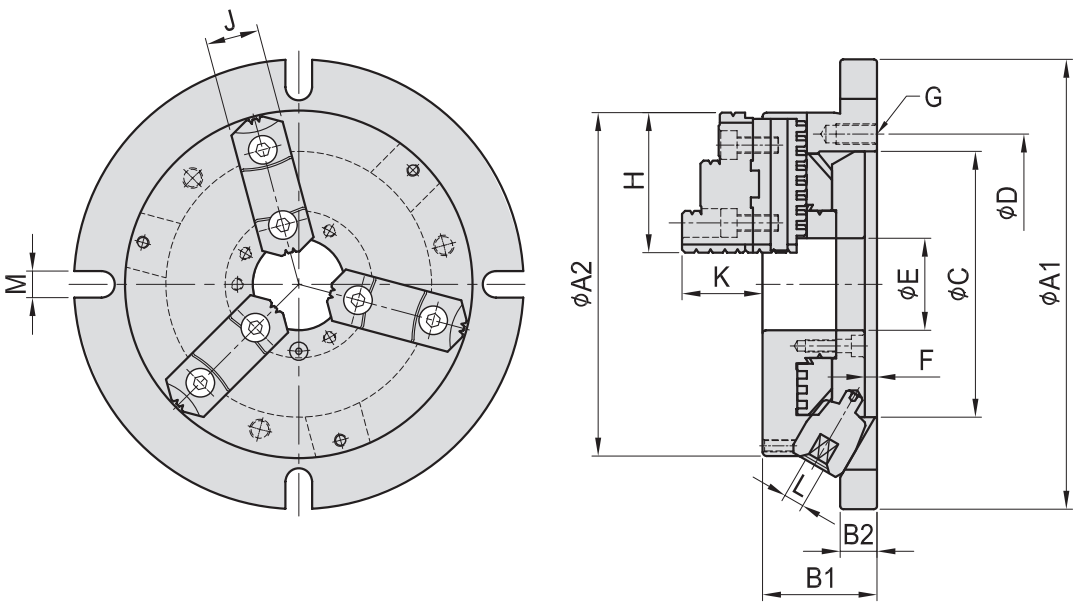


| SPEC./MODEL | A1" | A2" | B1" | B2" | D" | E" | G" | H" | J" | K" | M" | Max. Dia Gripped by | | lb |
|---|---|---|---|---|---|---|---|---|---|---|---|---|---|---|
| | | | | | | | | | | | | external | internal | |
| NBK-06 | 8.66 | 6.69 | 2.28 | 0.71 | 5.79 | 1.77 | M10x1.5 | 2.69 | 1.02 | 1.57 | 0.51 | ϕ0.31-ϕ6.29 | ϕ1.89-ϕ5.90 | 23 |
| NBK-08 | 10.63 | 8.27 | 2.56 | 0.79 | 6.77 | 2.36 | M10x1.5 | 3.22 | 1.10 | 1.69 | 0.51 | ϕ0.42-ϕ7.87 | ϕ2.44-ϕ7.48 | 39 |
| NBK-10 | 12.4 | 10.04 | 2.87 | 0.79 | 8.27 | 3.15 | M12x1.75 | 3.66 | 1.26 | 2.05 | 0.63 | ϕ0.47-ϕ9.84 | ϕ2.83-ϕ9.45 | 61 |
| NBK-12 | 14.57 | 12.01 | 3.15 | 0.87 | 11.22 | 4.13 | M12x1.75 | 4.63 | 1.57 | 2.32 | 0.71 | ϕ0.59-ϕ11.81 | ϕ3.39-ϕ11.42 | 94 |

These numbers are rounded. This chart is for reference only.
Please consult the cad drawings for exact dimensions

# MCA

# SQUARE 4 JAW
# SUPER THIN SQUARE CHUCKS

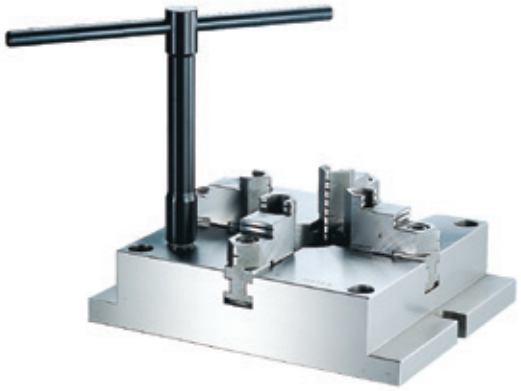

- MCA chucks are precisely ground.
- Uses American Standard Jaws.
- The repetitive gripping accuracy with the hard jaws are within 0.0008".

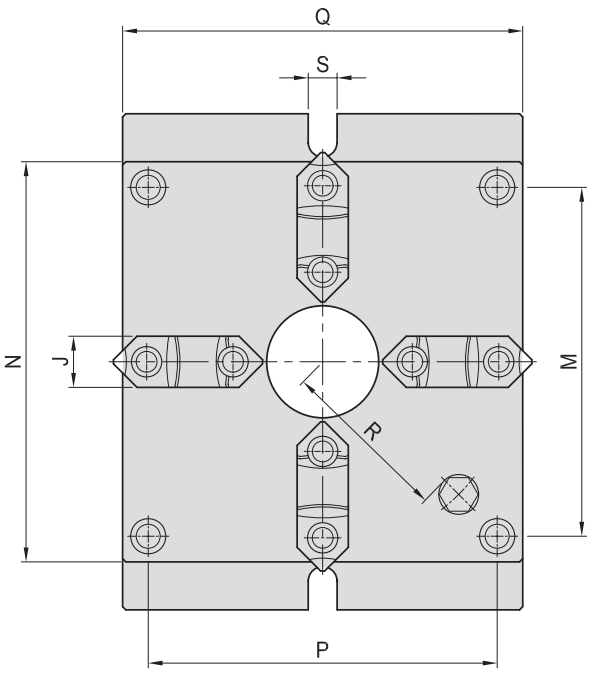


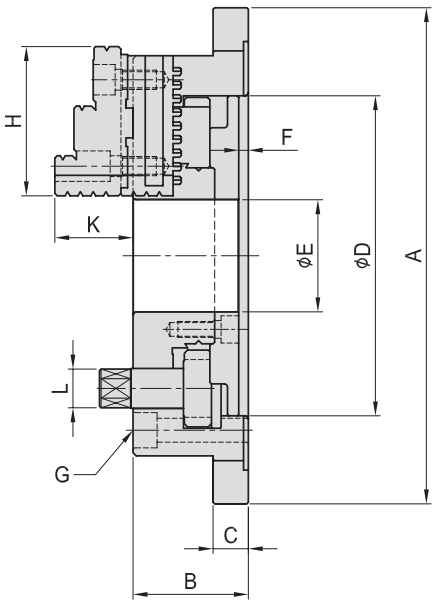


| SPEC./MODEL | A" | B" | C" | E" | G" | H" | J" | K" | M" | N" | P" | Q" | S" | Max. Dia Gripped by | | lb |
|---|---|---|---|---|---|---|---|---|---|---|---|---|---|---|---|---|
| | | | | | | | | | | | | | | external | internal | |
| MCA-06 | 8.46 | 2.24 | 0.71 | 1.57 | M10 | 2.70 | 1.02 | 1.54 | 5.67 | 6.5 | 5.67 | 6.5 | 0.71 | ϕ0.16-ϕ5.04 | ϕ2.17-ϕ5.04 | 25 |
| MCA-08 | 9.84 | 2.56 | 0.79 | 2.17 | M12 | 3.24 | 1.10 | 1.69 | 6.85 | 7.87 | 6.85 | 7.87 | 0.71 | ϕ0.20-ϕ6.38 | ϕ2.44-ϕ6.38 | 41 |
| MCA-10 | 12.20 | 2.83 | 0.87 | 2.76 | M14 | 3.68 | 1.26 | 1.97 | 8.58 | 9.84 | 8.58 | 9.84 | 0.71 | ϕ0.24-ϕ7.87 | ϕ2.83-ϕ7.87 | 69 |
| MCA-12 | 14.96 | 3.35 | 0.98 | 3.94 | M16 | 4.63 | 1.57 | 2.2 | 10.79 | 12.2 | 10.79 | 12.2 | 0.87 | ϕ0.39-ϕ10.43 | ϕ3.54-ϕ10.43 | 124 |

These numbers are rounded. This chart is for reference only.
Please consult the cad drawings for exact dimensions

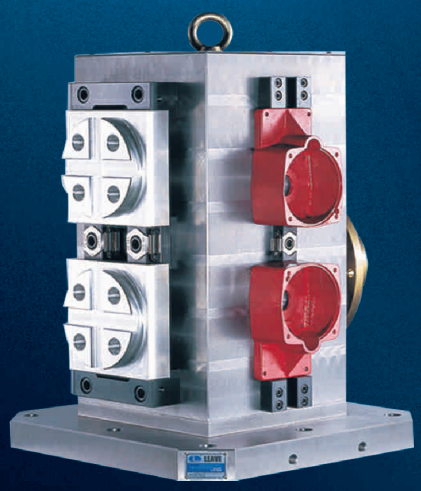

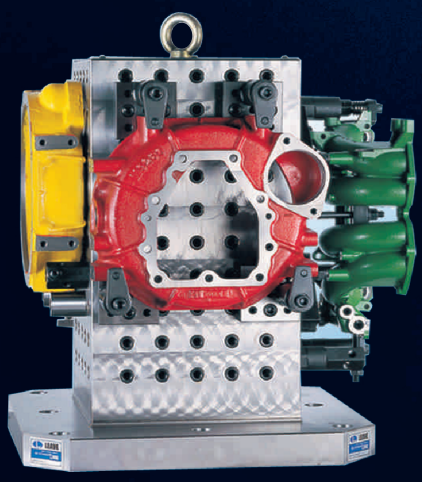

*TOOLING & WORK HOLDING COMPONENTS*


## LEAVE INDUSTRIAL CO., LTD.

No. 12, Lane 179, Yu-San St., Taoyuan Dist.,
Taoyuan City, Taiwan R.O.C.
TEL: 886-3-3615566
FAX: 886-3-3617700, 886-3-3615536
E-mail: leaveco@ms19.hinet.net
Website: www.leave.com.tw

## EXCLUSIVE N. AMERICAN DISTRUBUTOR
## TOMBSTONECITY
## PALM CITY, USA

TEL: 1-631-385-9452
E-mail: info@tombstonecity.com
Website: www.tombstonecity.com


*Catalog#22/06*